Op-Amp Circuits with Phasors

EE 206 Circuits I

Jake Glower

03/19/20

Please visit Bison Academy for corresponding lecture notes, homework sets, and solutions

Single-Pole Low-Pass Filter

Find the voltage, y(t), for

$$x(t) = 3\sin(50t)$$

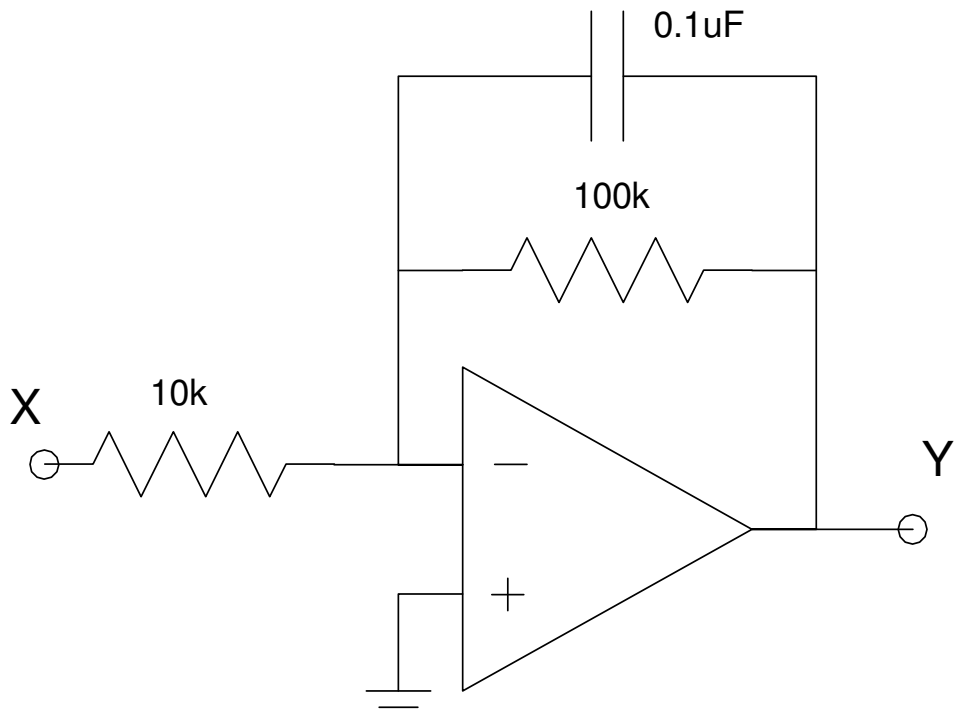

Step 1:

- Define ground (already done)
- Define the voltage nodes
- Convert to the phasor domain

$$x(t) = 3\sin(50t) \rightarrow X = 0 - j3$$

$$0.1\mu F \rightarrow \frac{1}{j\omega C} = -j200k$$

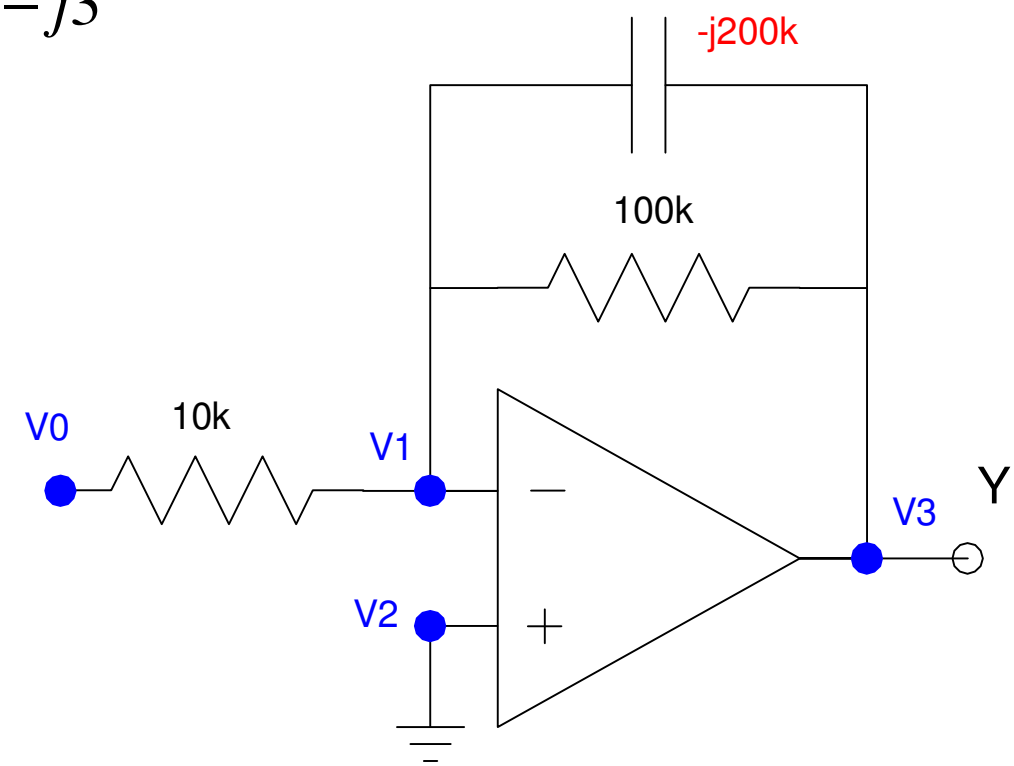

Step 2: Write the voltage node equtions

$$V_0 = -j3$$

$$V_1 = V_2$$

$$V_2 = 0$$

$$\left(\frac{V_1 - V_0}{10k}\right) + \left(\frac{V_1 - V_3}{-j200k}\right) + \left(\frac{V_1 - V_3}{100k}\right) = 0$$

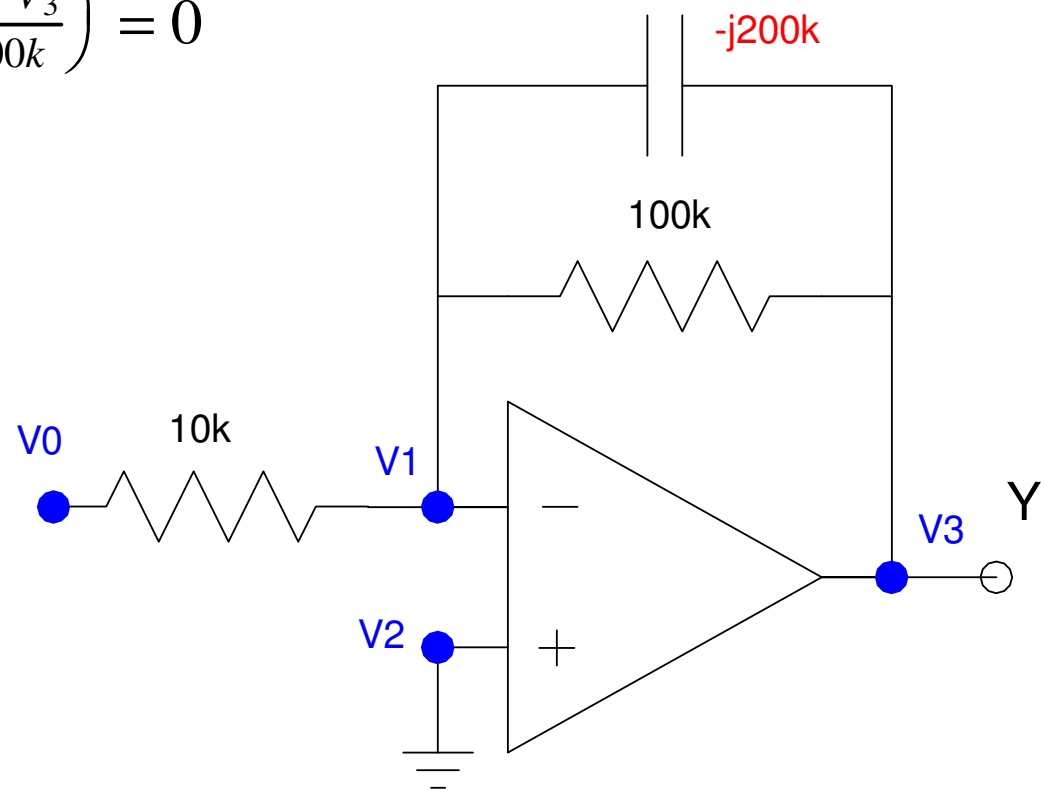

Solve

$$V_3 = 12 + j24 = 26.8\angle 63^0$$

meaning

$$v_3(t) = 12\cos(50t) - 24\sin(50t)$$

$$v_3(t) = 26.8\cos(50t + 63^0)$$

Checking in CircuitLab: The input is

$$Hz = \frac{\omega}{2\pi} = \frac{50 \text{ rad/sec}}{2\pi} = 7.958Hz$$

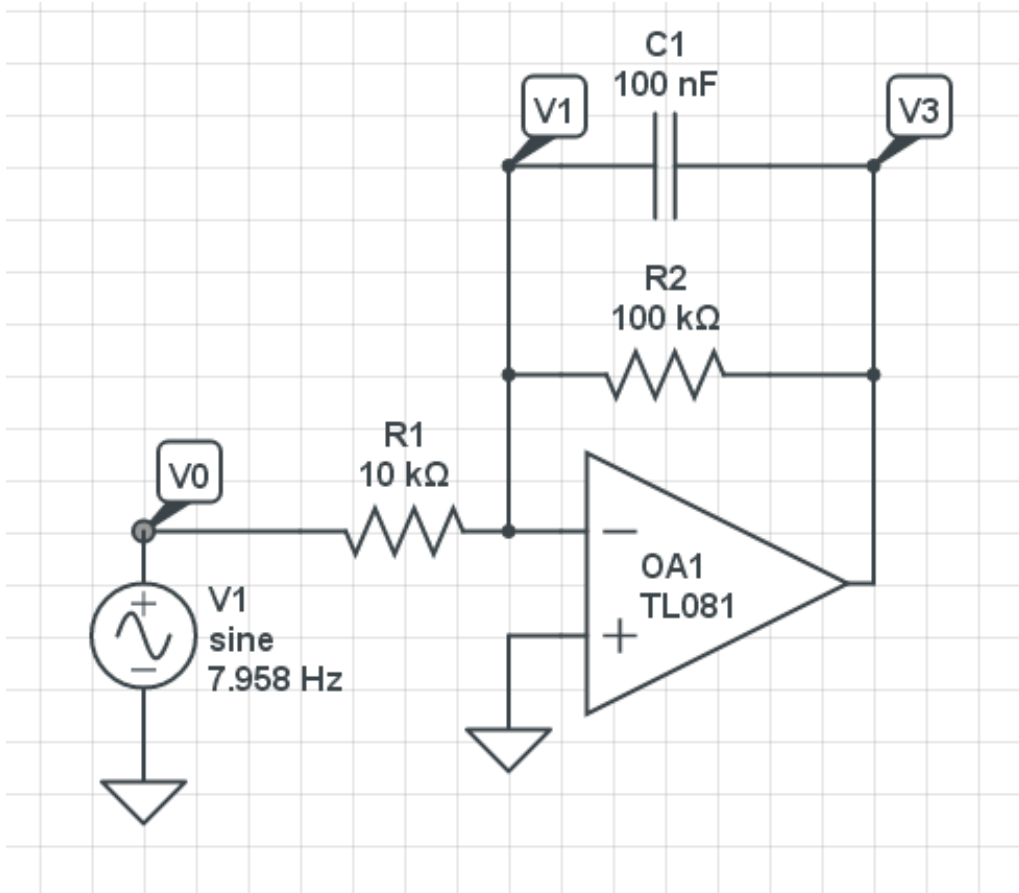

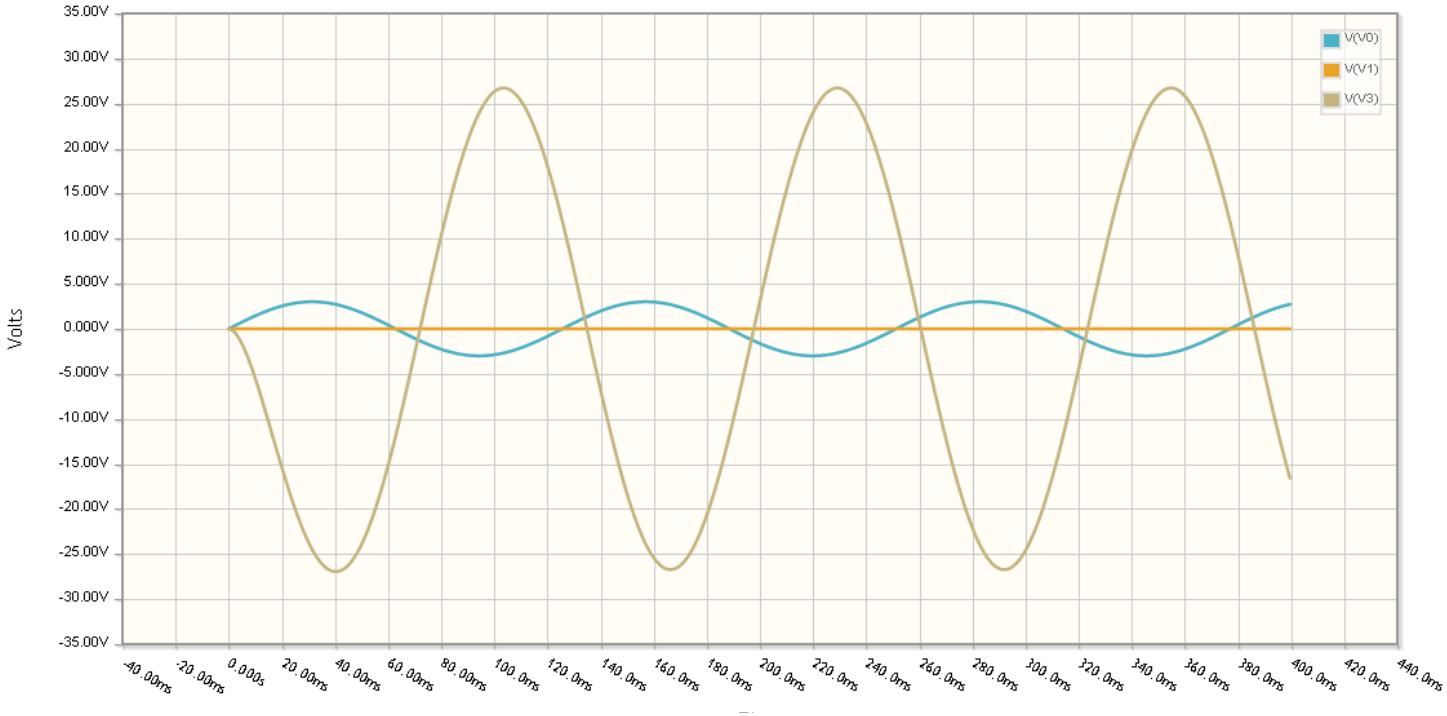

- The period is 126ms (7.958Hz = 50 rad/sec)
- The peak is 26.825V (vs. 26.8V calculated)
- The peak of V3 is at t = 104.6ms (delay = -297 degrees)

This matches our calculations

Example 2: Two-Pole Op-Amp Circuit

Find y(t) for

$$x(t) = 3\cos(40t)$$

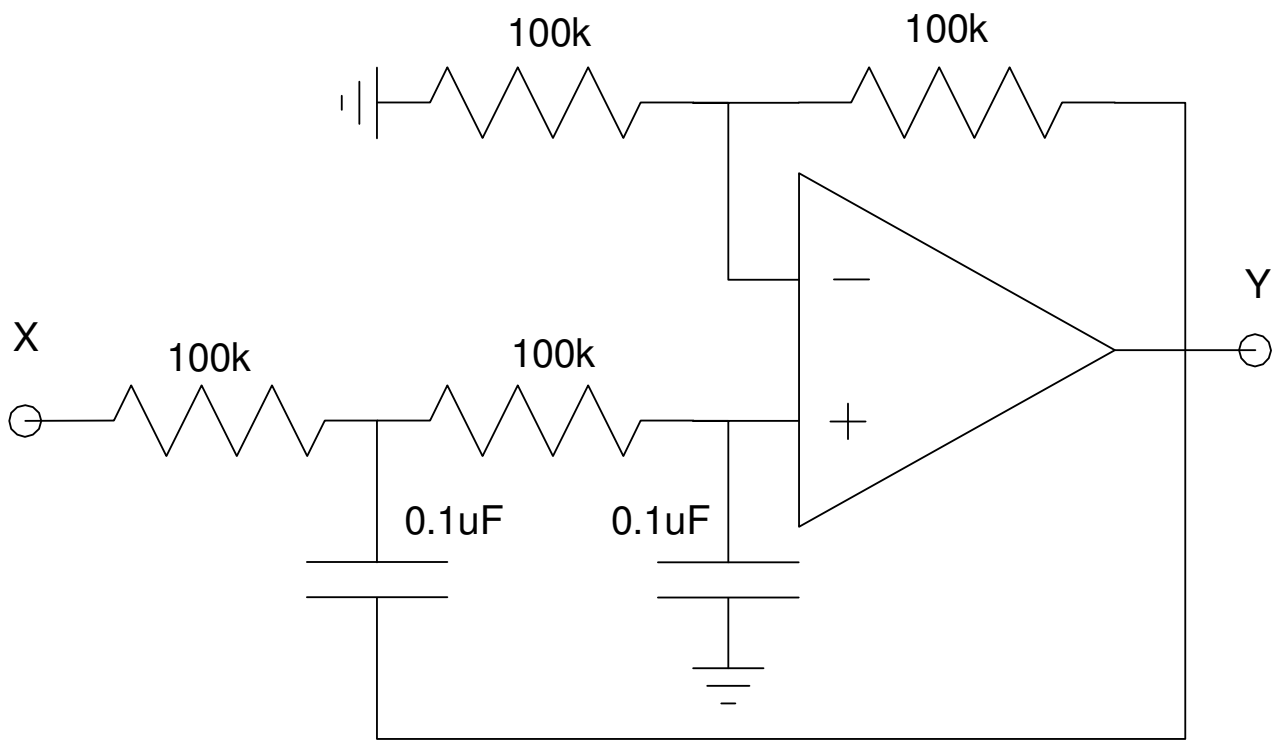

Step 1:

- Define circuit ground (already done)
- Define the voltage nodes
- Convert to phasors

$$3\cos(40t) \rightarrow 3 + j0$$

$$0.1\mu F \rightarrow \frac{1}{j\omega C} = -j250k$$

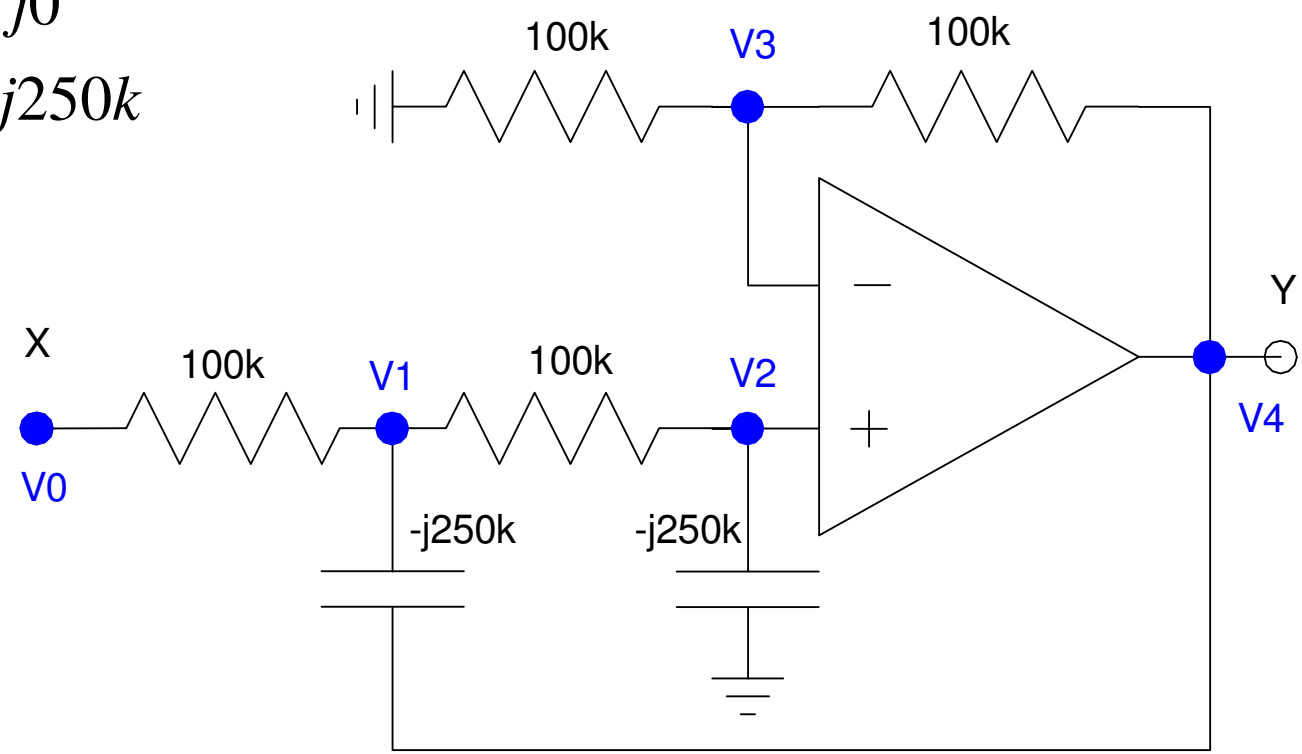

Step 2: Write the voltage node equations.

$$V_0 = 3 + j0$$

$$V_2 = V_3$$

$$\left(\frac{V_1 - V_0}{100k}\right) + \left(\frac{V_1 - V_4}{-j250k}\right) + \left(\frac{V_1 - V_2}{100k}\right) = 0$$

$$\left(\frac{V_2 - V_1}{100k}\right) + \left(\frac{V_2 - 0}{-j250k}\right) = 0$$

$$\left(\frac{V_3 - 0}{100k}\right) + \left(\frac{V_3 - V_4}{100k}\right) = 0$$

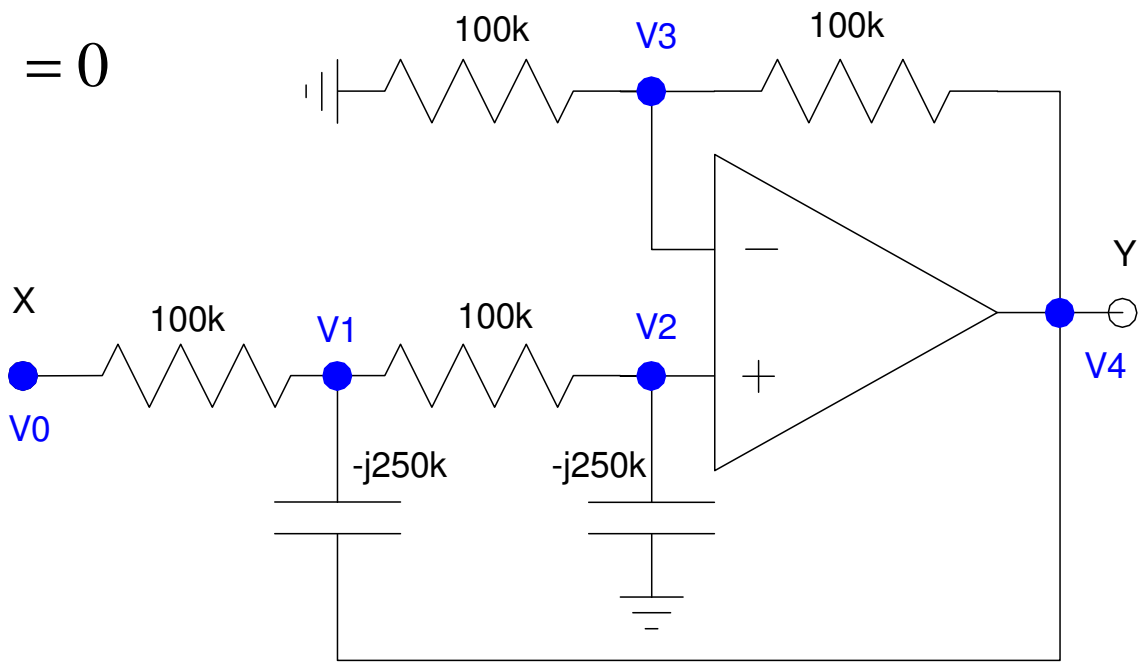

Step 3: Solve

Group terms

$$V_0 = 3$$

$$V_2 - V_3 = 0$$

$$\left(\frac{-1}{100k}\right)V_0 + \left(\frac{1}{100k} + \frac{1}{-j250k} + \frac{1}{100k}\right)V_1 + \left(\frac{-1}{100k}\right)V_2 + \left(\frac{-1}{100k}\right)V_4 = 0$$

$$\left(\frac{-1}{100k}\right)V_1 + \left(\frac{1}{100k} + \frac{1}{-j250k}\right)V_2 = 0$$

$$\left(\frac{1}{100k} + \frac{1}{100k}\right)V_3 + \left(\frac{-1}{100k}\right)V_4 = 0$$

```
V1     3.4658041 - 0.2218115i
V2     2.9112754 - 1.3863216i
V3     2.9112754 - 1.3863216i
V4     5.8225508 - 2.7726433i       = Y
```

$$v_4(t) = 5.822\cos(40t) + 2.77\sin(40t)$$

Checking in CircuitLab:

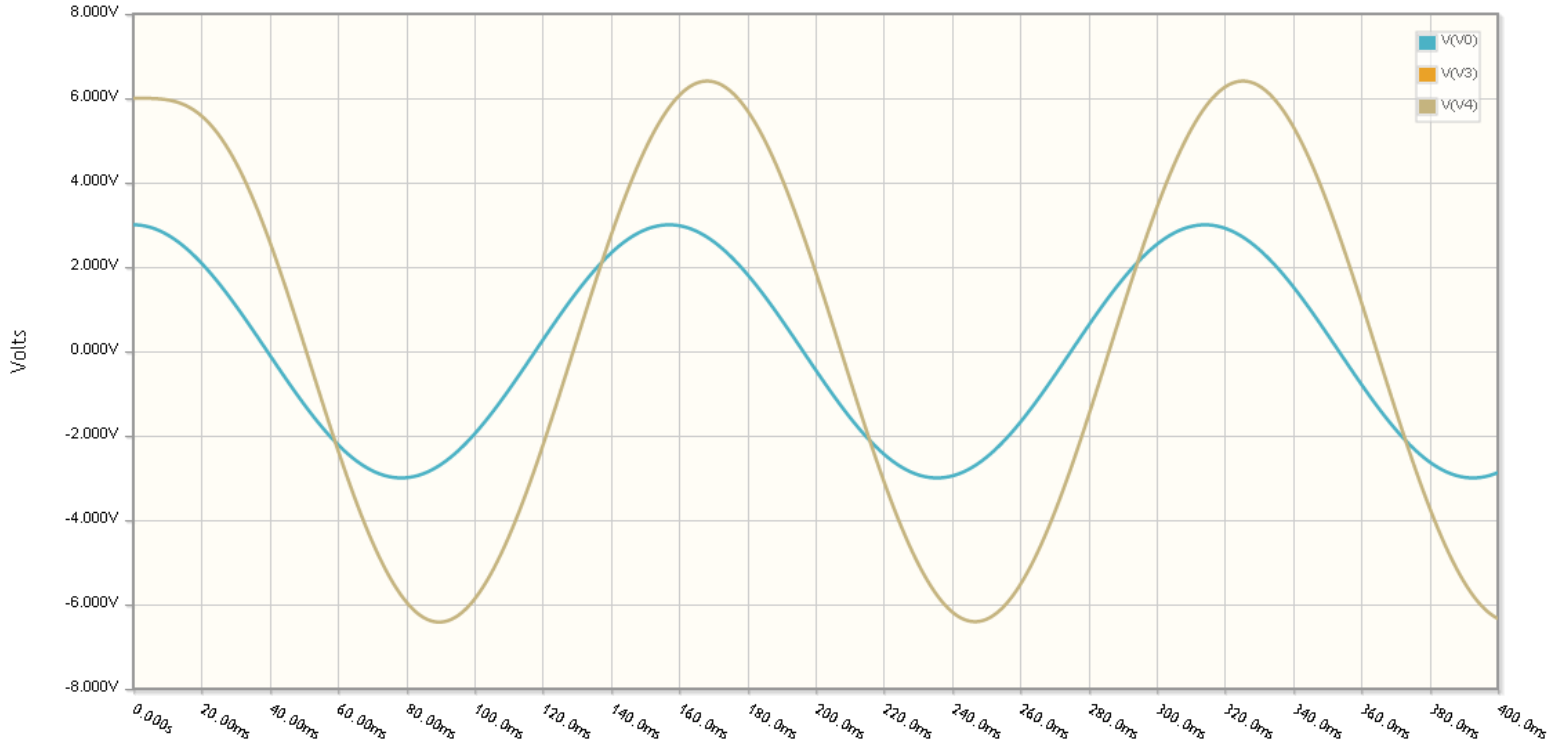

The output peak is 6.447V (vs. 6.447V computed)

$$\phi = \left(\frac{\text{9.9ms delay}}{\text{157ms period}}\right) \cdot 360^0 = 22.7^0 \text{ delay (vs. 25 degrees computed)}$$