ECE 320 - Final (pt 1): Name _____

Semiconductors - Diodes. October 29, 2015

1a) What is meant by the term "p-type semiconductor"?

#holes >> #electrons

4

1b) Assume a diode has the V/I characteristics shown below. Determine the Thevenin equivalent for the circuit. From this, determine the current through the diode using load-line techniques.

Vth	Rth	Load Line	Id
9.60V 4	140Ω 4	show on graph 4	32mA 4

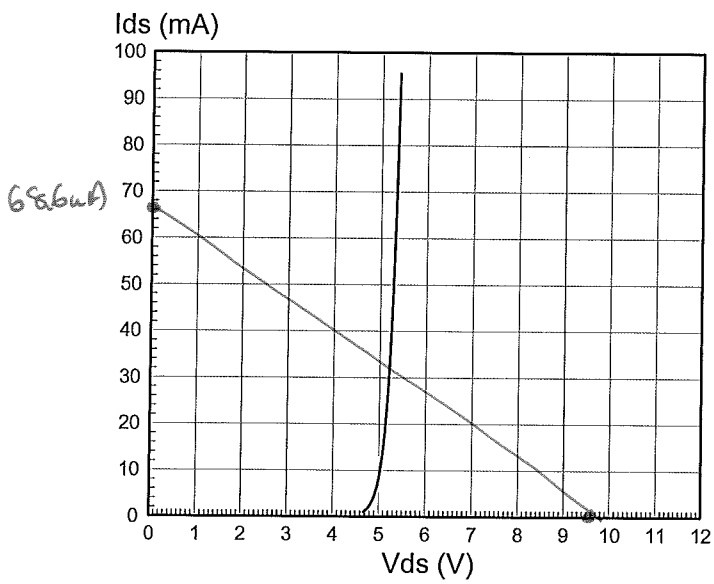

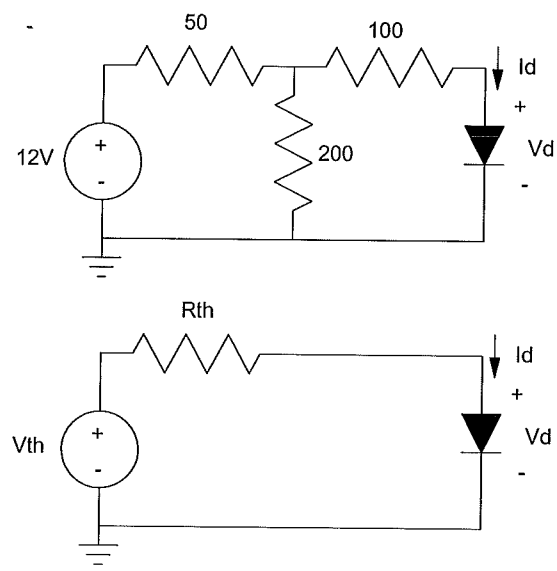

2) For the following circuit, write the voltage node equations using the nonlinear model for a diode

$$I_d = 10^{-8}\exp\left(\frac{V_d}{0.052} - 1\right) \qquad V_d = 0.052 \cdot \ln\left(\frac{I_d}{10^{-8}} + 1\right)$$

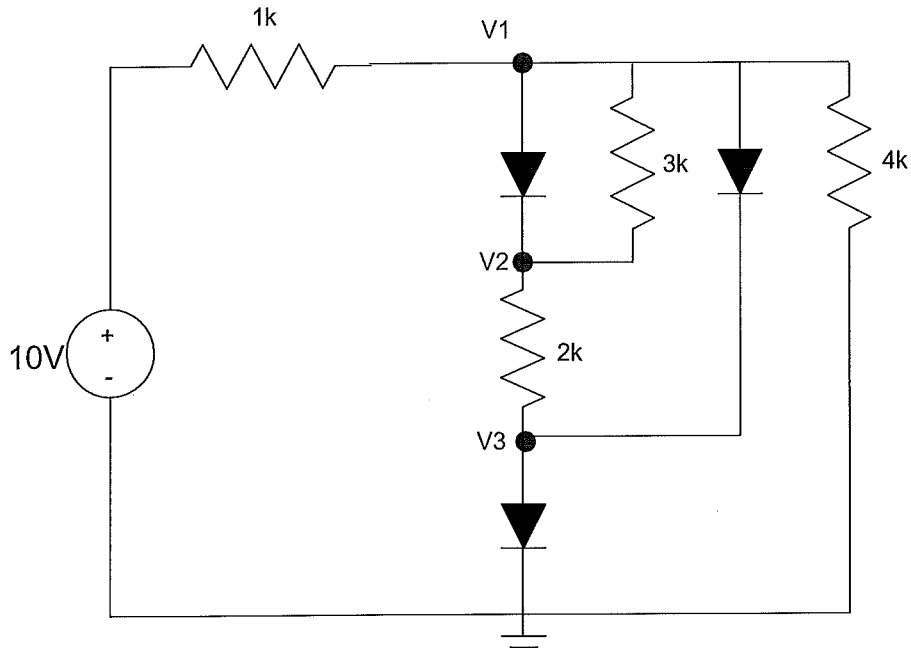

Node 1	$\frac{V_1-10}{1k} + \frac{V_1-V_2}{3k} + \frac{V_1}{4k} + 10^{-8}\exp\left(\frac{V_1-V_2}{.052}-1\right) + 10^{-8}\exp\left(\frac{V_1-V_3}{.052}-1\right) = 0$ 5 2
Node 2	$10^{-8}\exp\left(\frac{V_1-V_2}{0.052}-1\right) = \frac{V_2-V_1}{3k} + \frac{V_2-V_3}{2k}$ 2 1
Node 3	$10^{-8}\exp\left(\frac{V_1-V_3}{.052}-1\right) = \frac{V_3-V_2}{2k} + 10^{-8}\exp\left(\frac{V_3}{.052}-1\right)$ 1 2

3) Assume ideal silicon diodes (Vf = 0.7V). Determine the node voltages for the following circuit.

V1	V2	V3
1.4V	.98V	0.7V

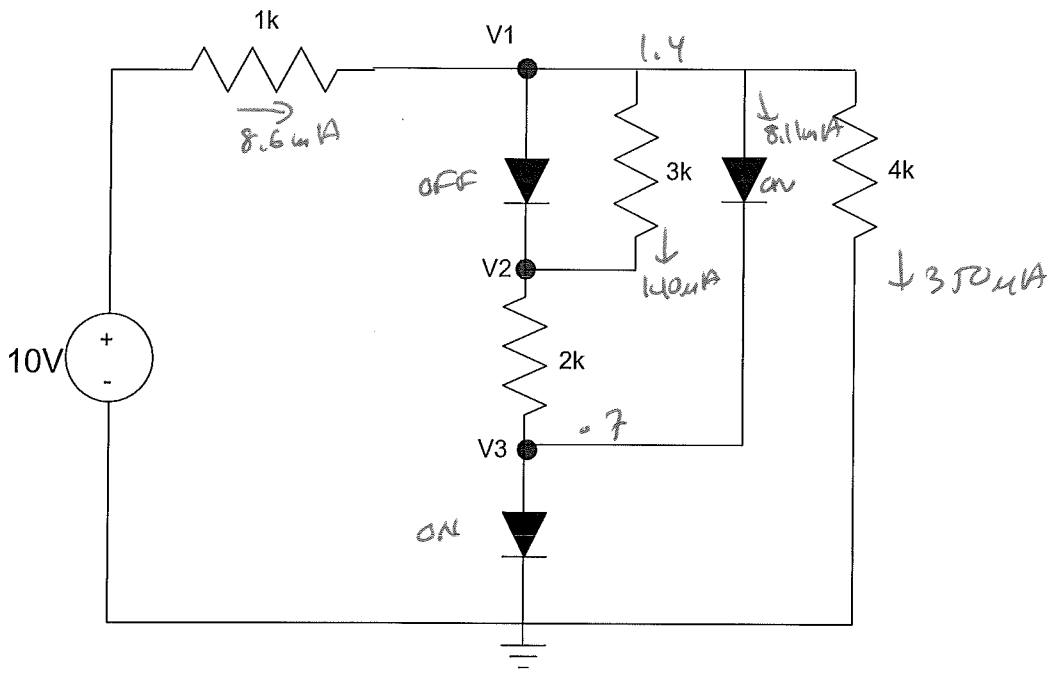

4) Max / Min: Determine the currents through the diodes for the following max/min circuit

I1	I2	I3	I4
0	2.5mA	0.8mA	0

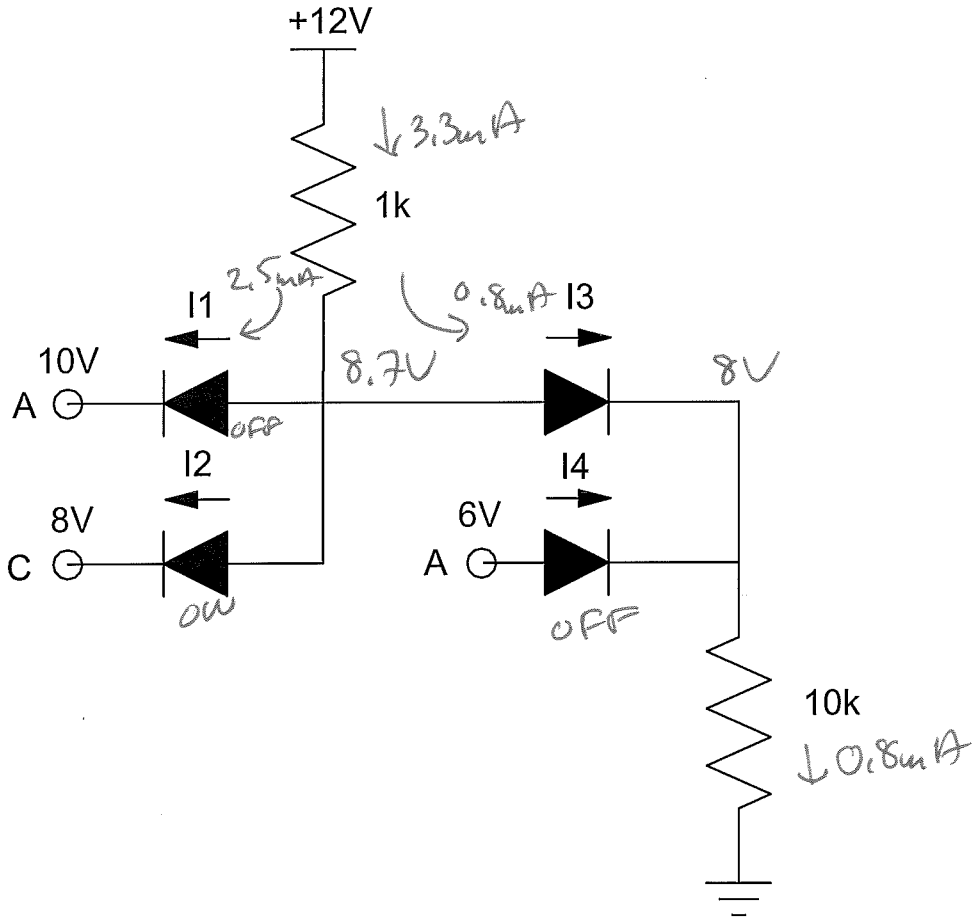

5) AC to DC: Determine the value of R, C, and L so that

- The current to the load is 200mA
- The voltage at Va has a ripple of 1Vpp
- The voltage at Vb has a ripple of 100mVpp

Voltage at Vb (DC value)	R for 200mA at the load	C for 1Vpp ripple at Va	L for 100mVpp ripple at Vb
14.3V	71.5Ω	3.333mF	1.887H
13.8V (actual)	69Ω		1.8211H

(avg = ½V less than peak)

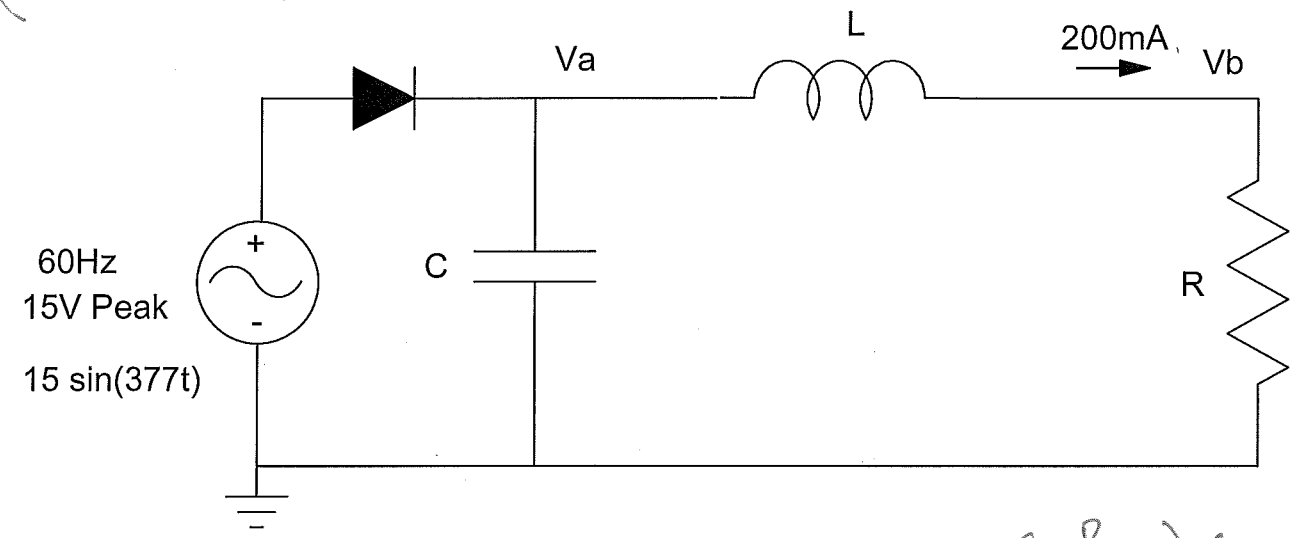

$I = C\frac{dv}{dt}$

$.2 = C\frac{1V}{1/60}$

$0.1_{pp} = \left(\frac{R}{R+j\omega L}\right)(1V_{pp})$

Bonus! In 2012, Steven Colbert ran for President on a platform of equal rights for corporation (since the are people according to the Supreme Court). What rights specifically did he want corporations to have? (circle all that apply)

Right to marry - Right to bear arms - Right to a trial by jury -

No Cruel and Unusual Pushishment - Right to a speedy trial