ECE 320 - Final (pt 2): Name _____

BJT, MOSFET, Op-Amps. October 30, 2015

1a) Draw the load line for the following circuit on the graph below.

1b) Label on this graph when the BJT is

- Off
- Active
- Saturated

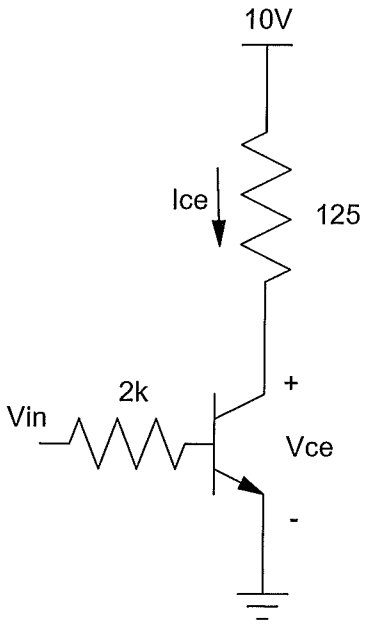

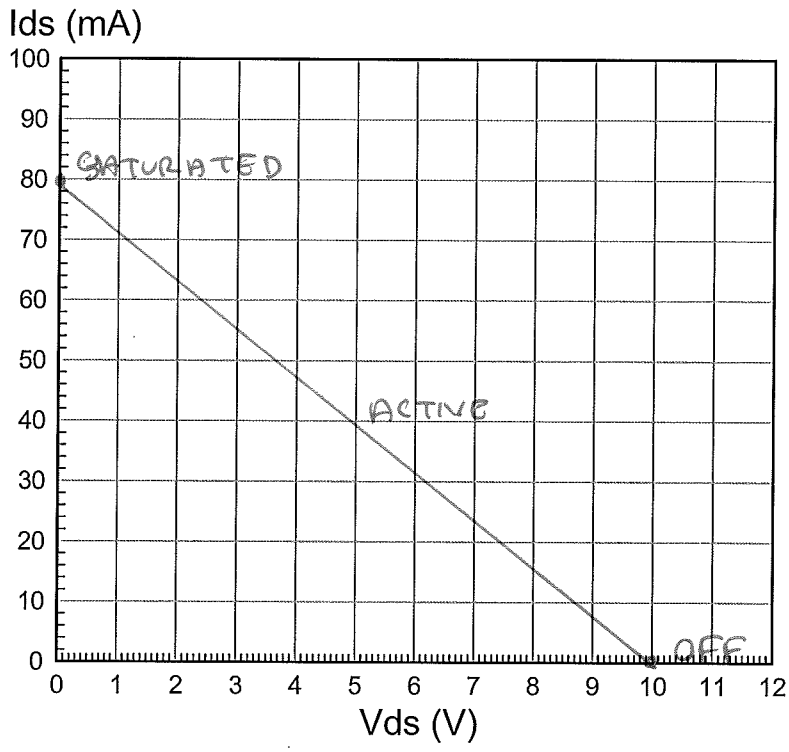

2) Determine the voltages and currents for the following circuit when Vin = 2V and Vin = 20V. Assume an ideal silicon transistor with a current gain of 100.

Vin = 2V		Vin = 20V	
Vce	Ice	Vce	Ice
1.875V	65mA	0.2V	78.4mA

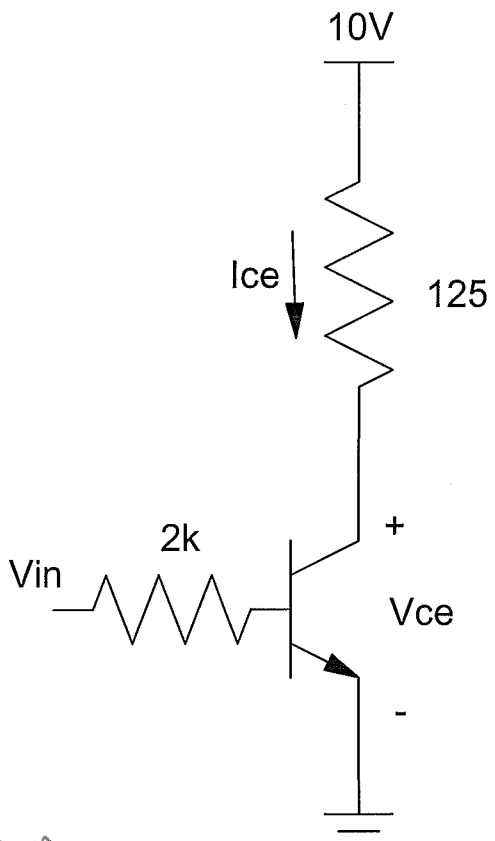

$$I_b = \frac{2 - 0.7}{2k} = 650\mu A$$

$$I_c = \beta I_b = 65mA$$

3) BJT H-Bridge. Determine the voltages at each node. Also determine the smallest R can be while keeping the BJT's off or saturated. Assume an ideal silicon transistor with a current gain of 100.

V1	V2	Smallest Allowable Value of R
0.2V	11.8V	30.8Ω
5	5	5

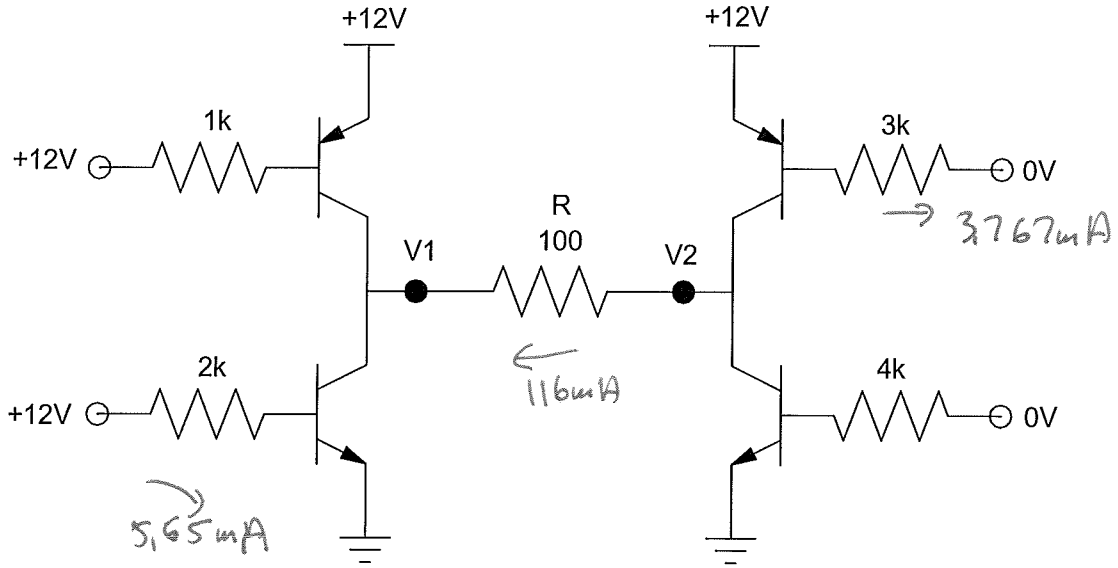

max = 376.7 mA

R = 11.6V / 376mA = 30.8Ω

4) The V/I characteristics for a MOSFET is shown below with Vt = 2V and 2V < Vgs < 20 (plotted every 1V for Vgs). Determine the following:

Label the regions (Off - Ohmic - Saturated)	Kn	Vgs for Rds = 2 Ohms at Ids = 150mA	Vgs for Rds = 10 Ohms at Ids = 150mA
on graph	.04	14.65V	5.25V

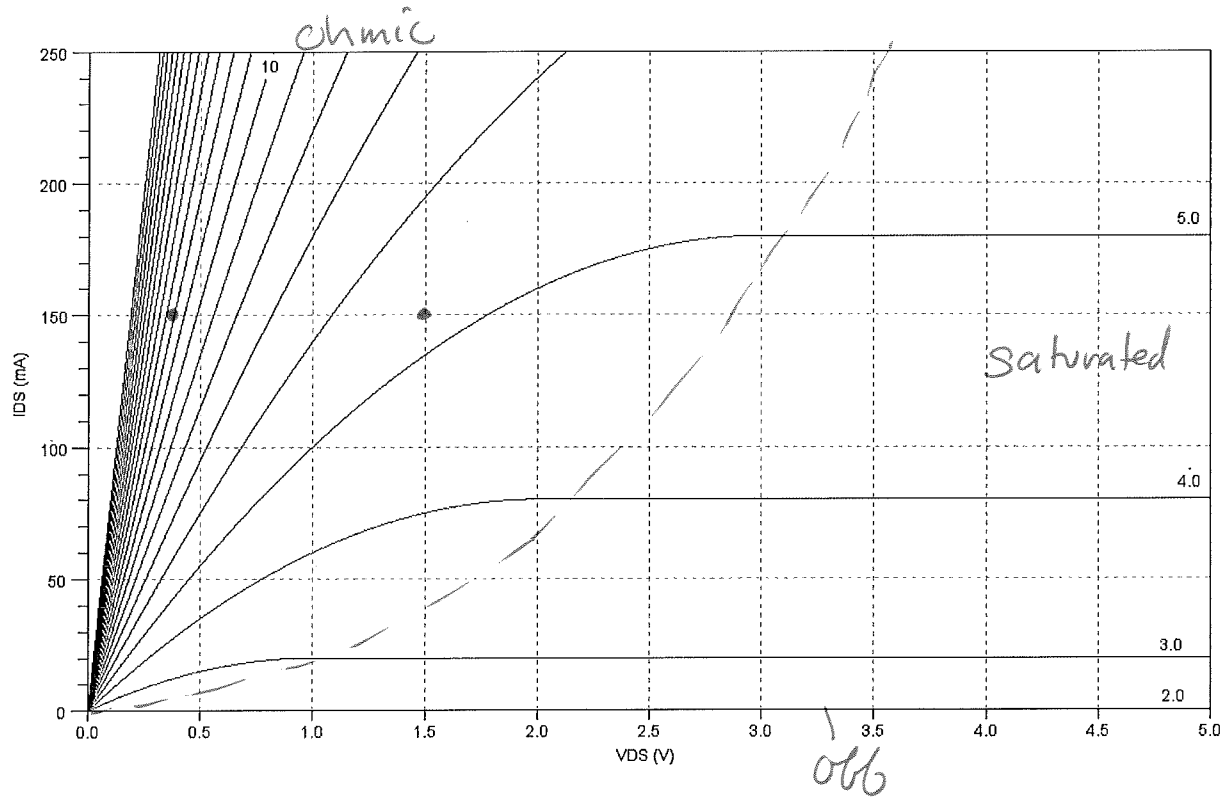

$$180mA = \frac{Kn}{2}(5-2)^2$$

$$Kn = .04$$

$$I_{ds} = Kn\left(V_{gs} - V_t - \frac{V_{ds}}{2}\right)V_{ds}$$

$$V_{gs} = \frac{.15\ 1}{Kn \cdot (.15)(2)} + \frac{.15 \cdot 2}{2} + 2$$

5) Design a Schmitt Trigger which outputs

- +10V when R < 2k Ohms and
- 0V when R > 3k Ohms

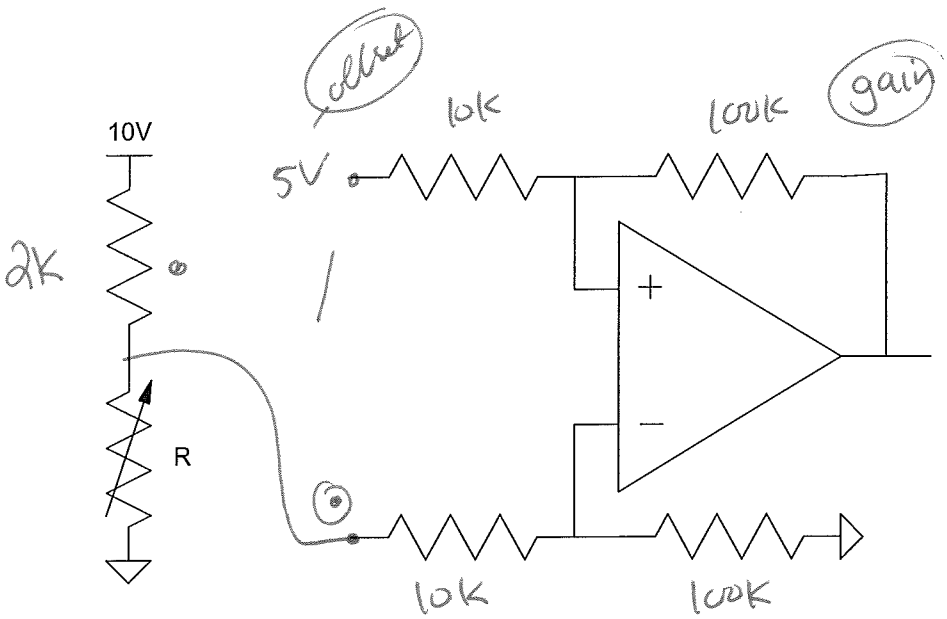

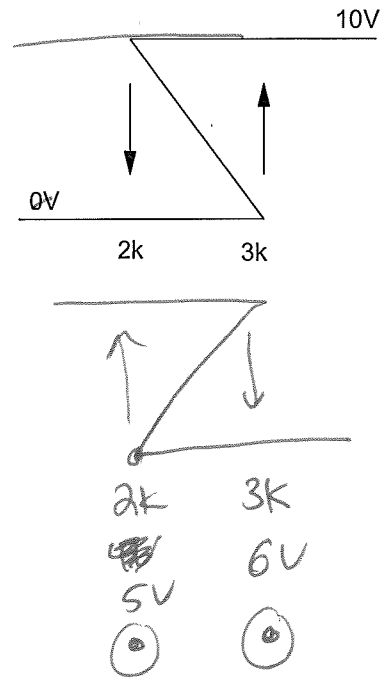

Bonus! In 2012, Steven Colbert ran attack adds against Mitt Romney, accusing him of being a mass murderer. What was the basis for this accusation?