ECE 320: Final - Part 1. Name _____

Semiconductors & Diodes - October 24, 2016

1a) Define the following terms:

p-type semiconductor

#holes >> #e⁻

n-type semiconductor

#e⁻ >> # holes

intrinsic silicon

e⁻ ≈ # holes

1b) Why does the resistance of silicon decrease as temperature increases?

electrons gain enough energy to break their covalent bonds, creating free e⁻ and holes.

2) The VI characteristics for an LED is shown below. Draw the load line for the following circuit and determine the operating point.

Load Line	Vd	Id
show on graph	2.2V	65mA

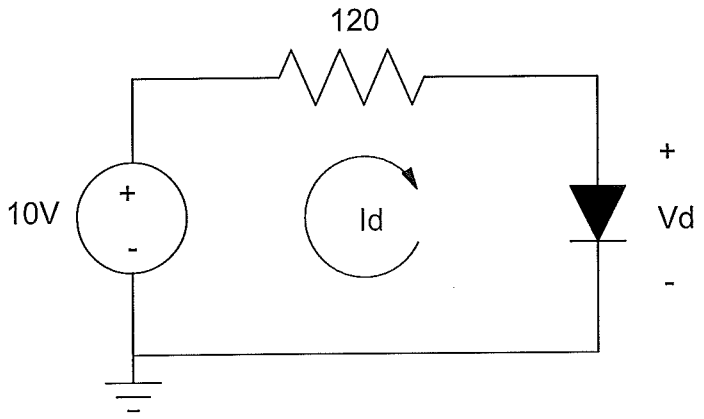

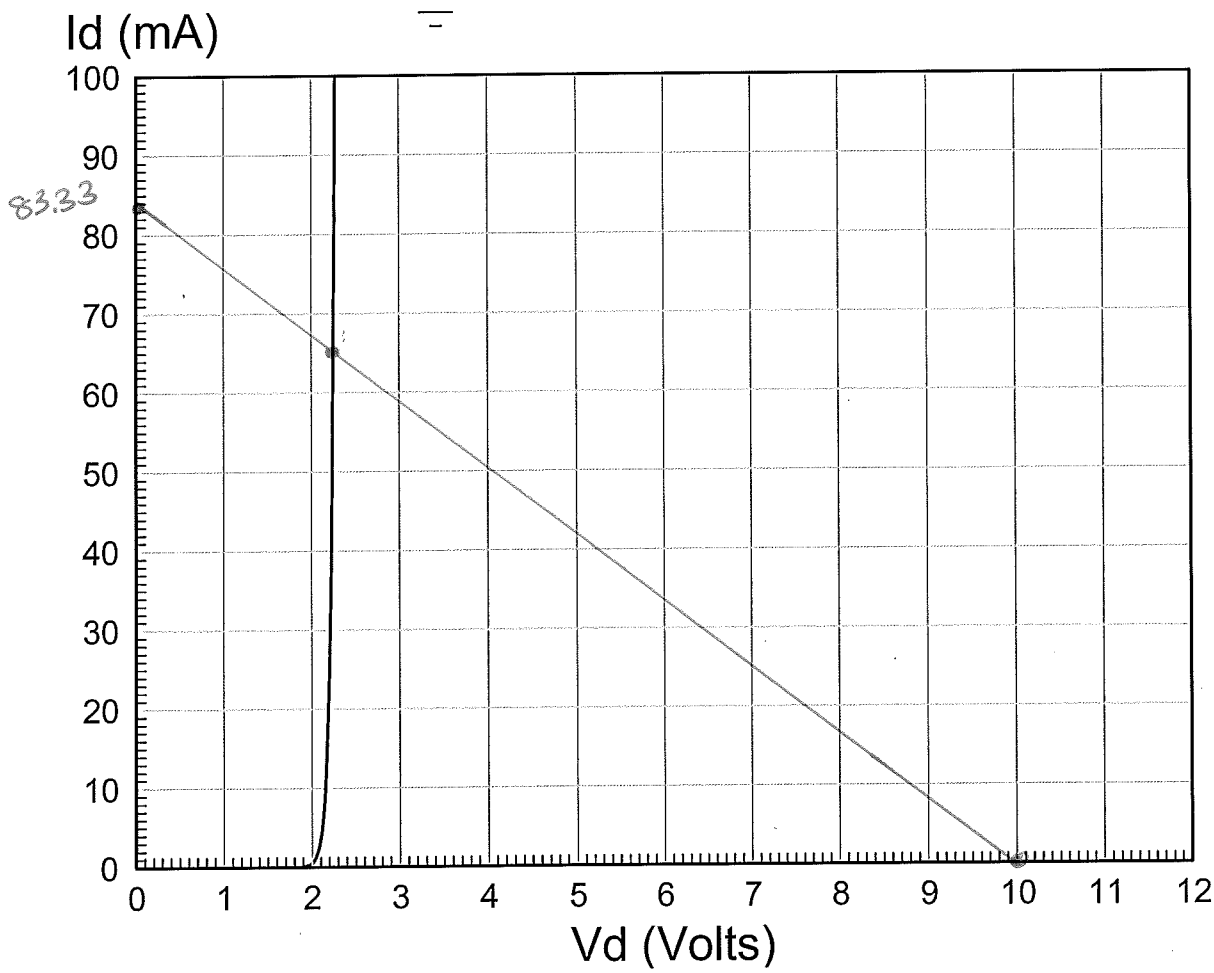

3) Assume ideal silicon diodes (Vf = 0.7V). Determine the currents, I1 - I4

I1	I2	I3	I4
20.93mA	0	4.64mA	16.29mA
19.75mA	-8.25mA	7mA	21mA

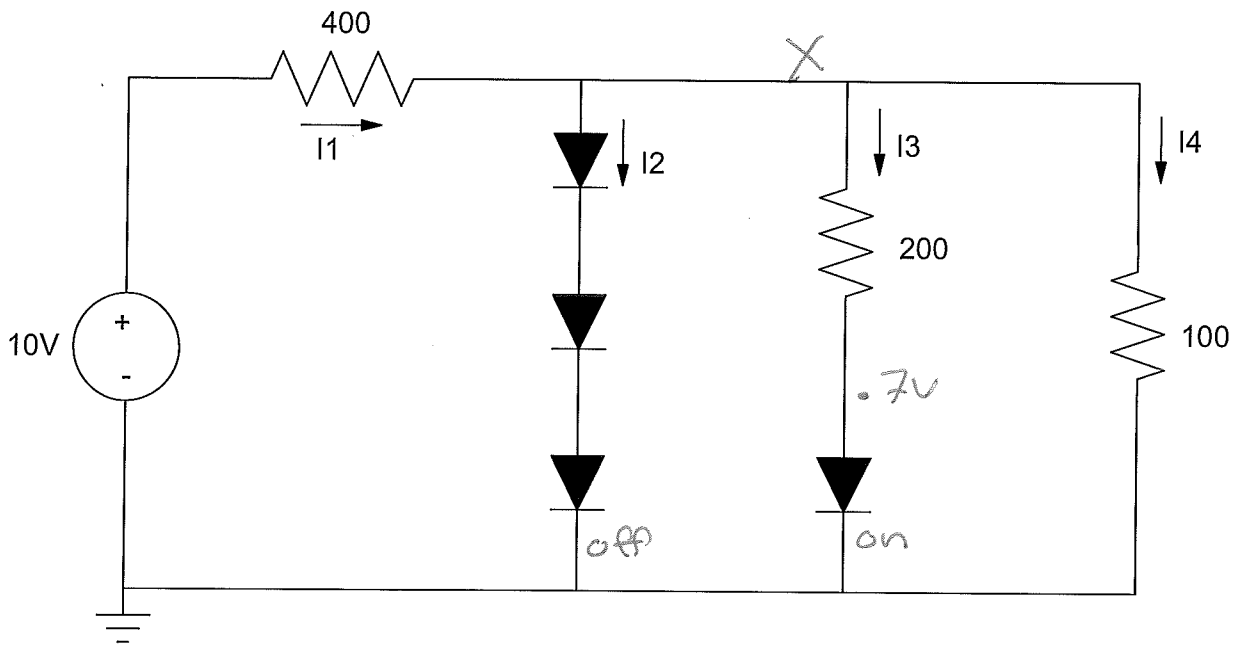

$$\frac{X-10}{400} + \frac{X-.7}{200} + \frac{X}{100} = 0$$

$$X = 1.6286$$

4) Assume ideal silicon diodes (Vf = 0.7V). Determine the currents, I1 - I4

I1	I2	I3	I4
0	4.9mA	.4mA	0

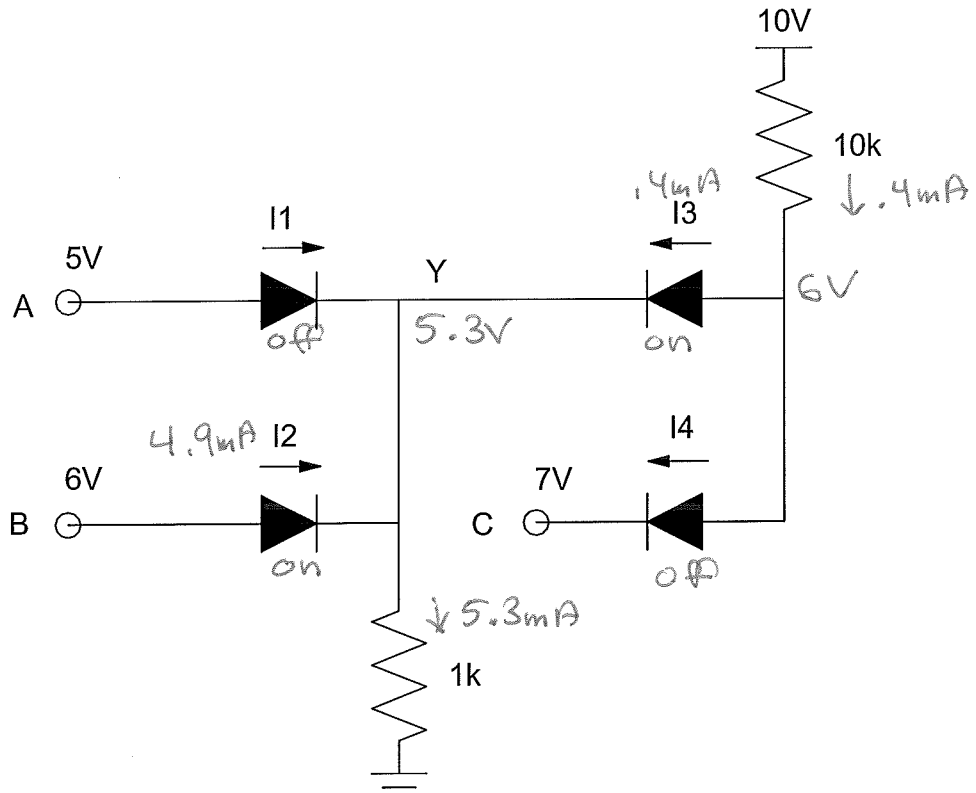

5) For the following AC to DC converter, determine the following

The DC voltage at V_1 $\frac{1}{\pi}\int_0^{\pi} 13.6\sin(t)\cdot dt$	V_{1pp} The peak-to-peak ripple at V_1:	V_{2pp} if C = 0	V_{2pp} if C = 50uF
8.658V	13.6Vpp	2.58Vpp	.683Vpp

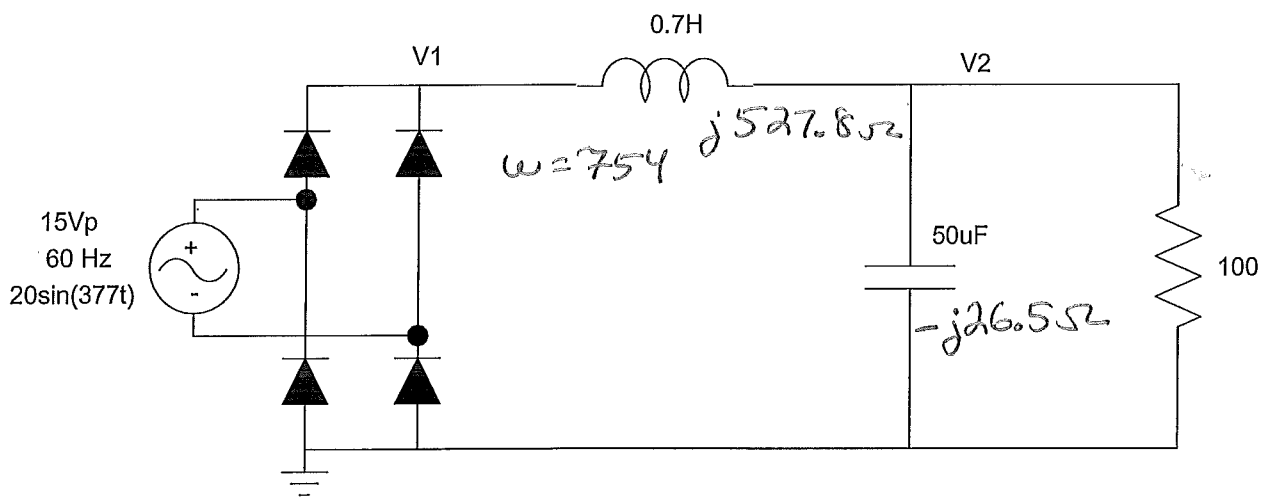

$$\frac{13.6}{\pi}\left(-\cos(t)\right)_0^{\pi} = \frac{2}{\pi}\cdot 13.6V = 8.658V$$

$$\left(\frac{100}{527.8}\right)13.6 = 2.58$$

$$\left(\frac{26.5}{100}\right)2.58 = .683$$

Bonus (Part 1): How many people voted in the 2012 Presidential Election in North Dakota?

312,076

ECE 320: Final - Part 2. Name Key

BJT Transistors & MOSFET Circuits - October 26, 2016

1) Draw the load line for the following circuit. Compute and show on the load line Ib, Ic, and Vce if $\beta = 100$.

Load Line	Ib	Ic	Vce
on graph	565uA	56.5mA	3.52V

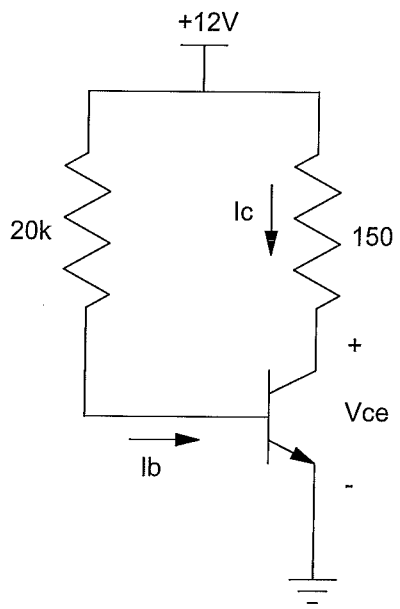

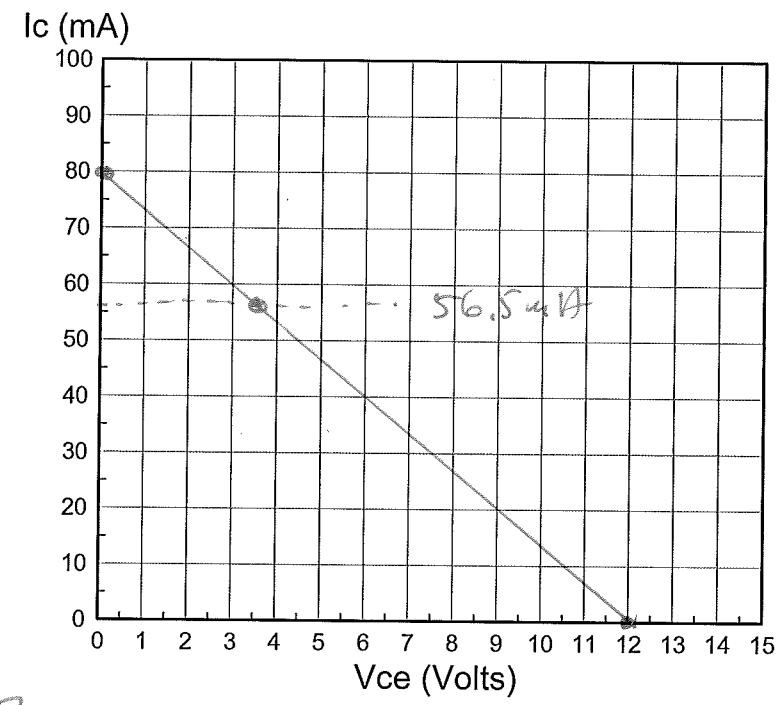

$$I_b = \left(\frac{12-.7}{20k}\right) = 565uA$$

$$\beta I_b = 56.5mA$$

2) Determine the voltages for the following DTL logic gate. Assume β = 100

V1	V2	V3	V4
1.4V	0.2V	0.9V	9.09V

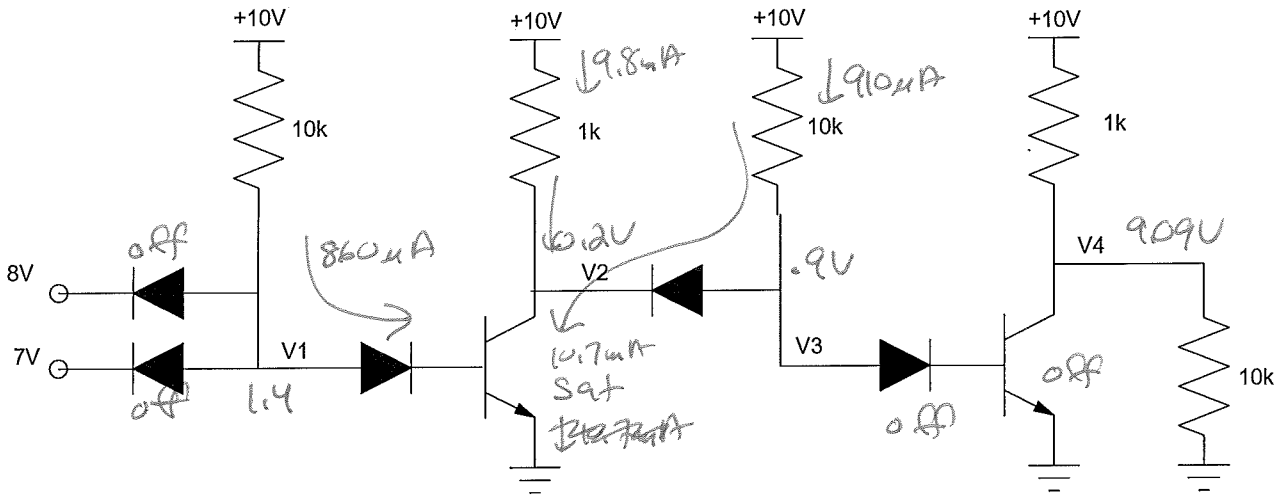

$\beta I_b = 86\mu A$

$I_c = 10.7mA$

$\beta I_b > I_c$

3) Design a Schmitt Trigger which outputs

- +10V when R > 6k Ohms
- 0V when R < 4k Ohms, and
- Is unchanged for 4k < R < 6k

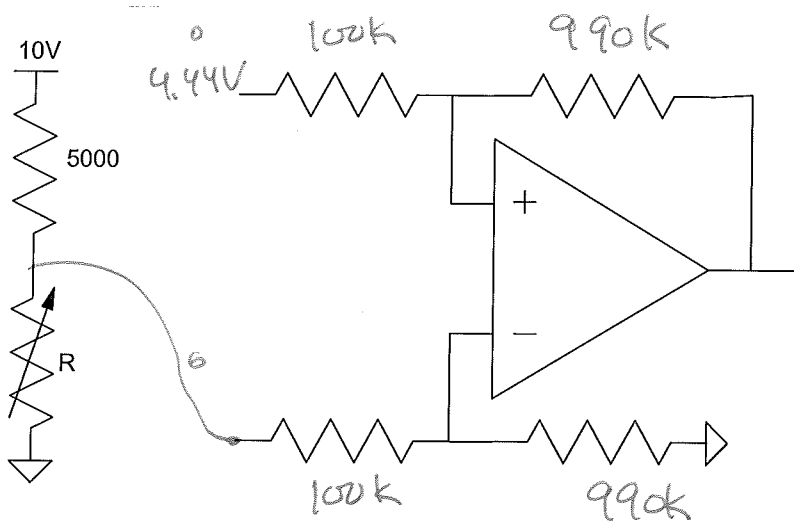

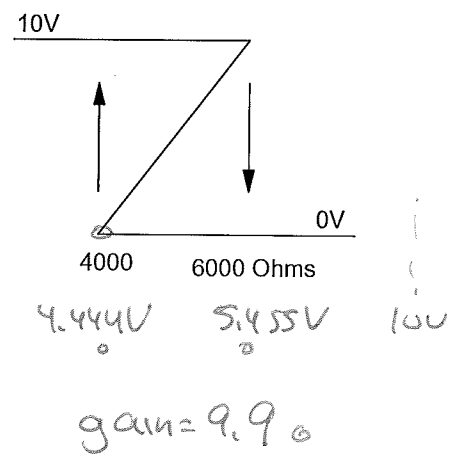

— or —