# ECE 320: Quiz #1: Name Key

EE 206 Review

**1) Conservation of Current:** Determine the currents Ia, Ib, Ic, and Id

| Ia | Ib | Ic | Id |
|---|---|---|---|
| 6 | 2 | 4 | 3 |

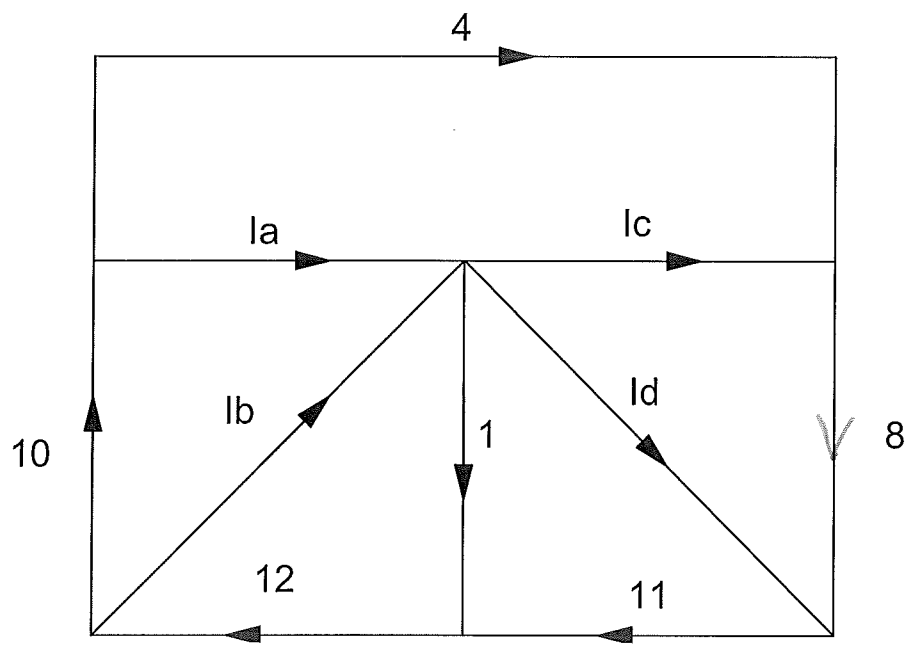

**2) Conservation of Voltage:** Determine the voltages V1, V2, V3, and V4

| V1 | V2 | V3 | V4 |
|---|---|---|---|
| 60 | 20 | 80 | 75 |

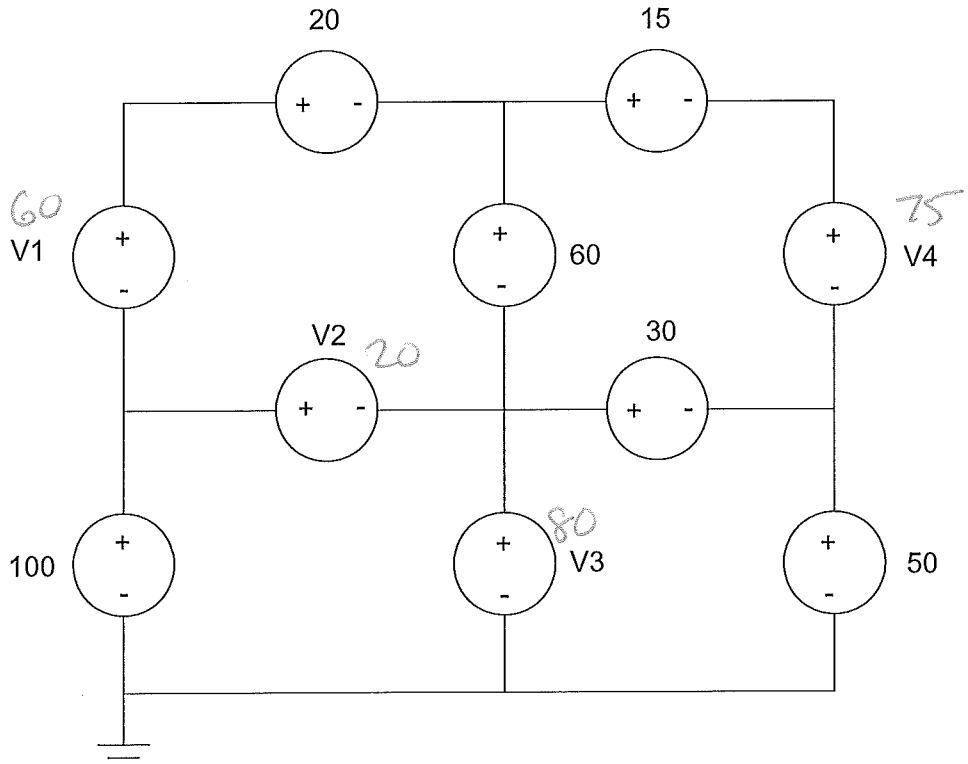

**3)** Write the voltage node equations for V1..V4 (sum of currents = zero).

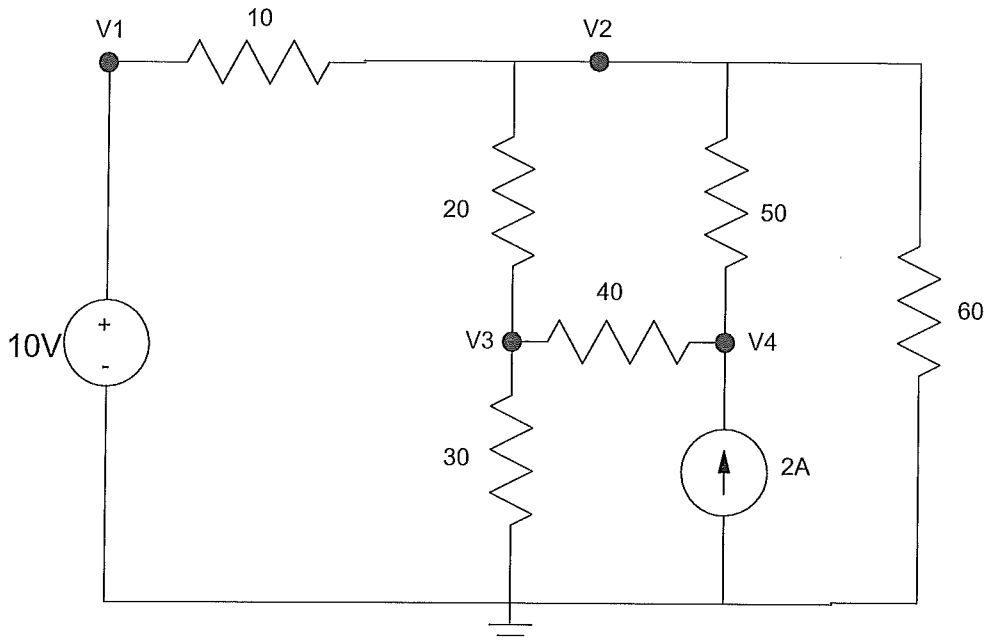


| |
|---|
| $V_1 = 10$ |
| $\frac{V_2-10}{10} + \frac{V_2-V_3}{20} + \frac{V_2-V_4}{50} + \frac{V_2}{60} = 0$ |
| $\frac{V_3-V_2}{20} + \frac{V_3-V_4}{40} + \frac{V_3}{30} = 0$ |
| $\frac{V_4-V_2}{50} + \frac{V_4-V_3}{40} - 2 = 0$ |

**4) KCL:** Write the current loop equations for I1..I4 (sum of voltages equals zero)

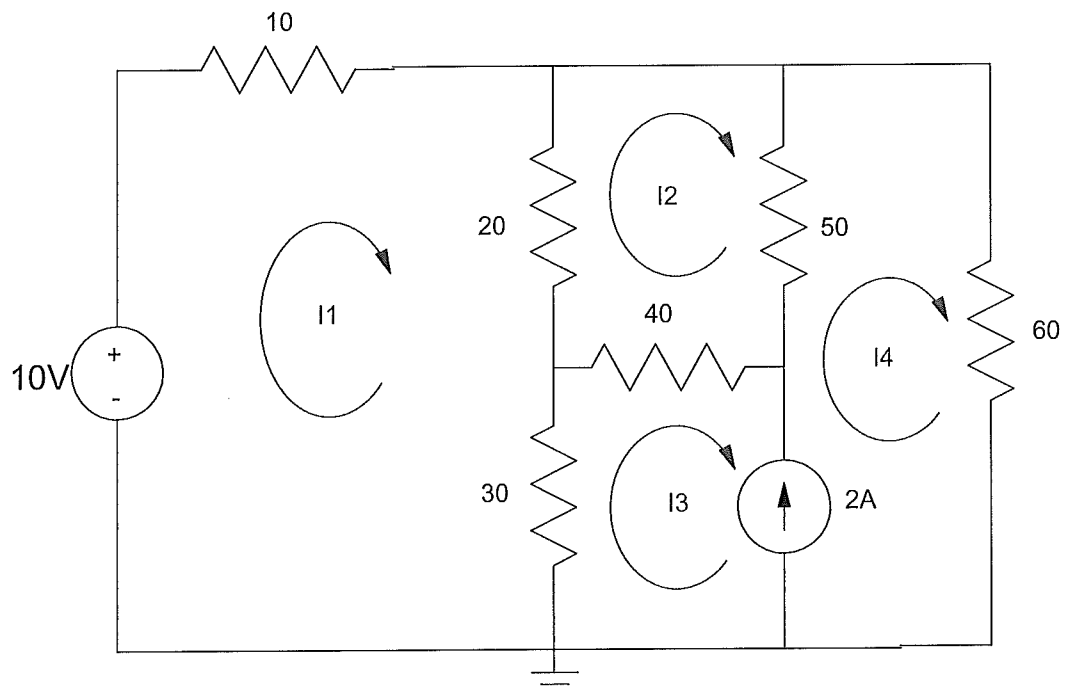


| |
|---|
| $-10 + 10I_1 + 20(I_1 - I_2) + 30(I_1 - I_3) = 0$ |
| $20(I_2 - I_1) + 50(I_2 - I_4) + 40(I_2 - I_3) = 0$ |
| $I_4 - I_3 = 2$ |
| $-10 + 10I_1 + 60I_4 = 0$ (various paths) |

**5) Thevenin Equivalents:** Find the Thevenin equivalent for the following circuit:

| Vth | Rth |
|---|---|
| 5V | 55 |

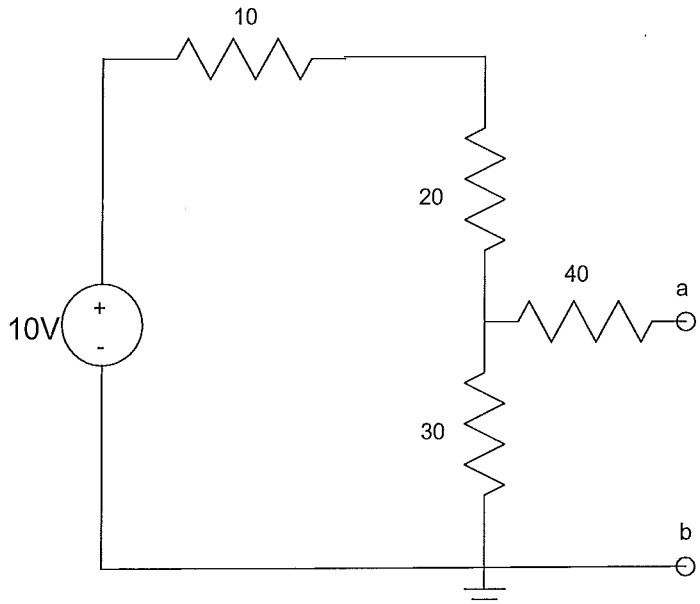


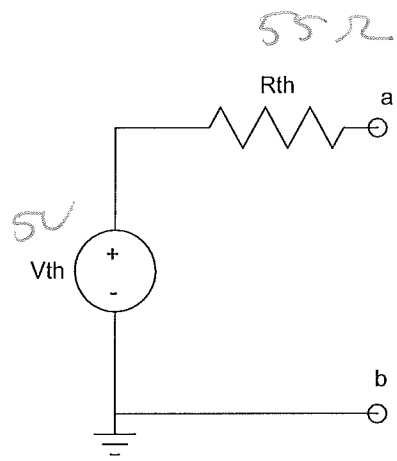


$$V_{th} = \left(\frac{30}{30+30}\right) 10 = 5$$

$$R_{th} = 40 + 30 \| 30 = 55$$

Bonus! In Fargo, what is the maximum number of dwellings you can build on a lot zoned for a single dwelling?

12!