ECE 320: Quiz #2 Name _____

Semiconductors, PN Junction, Diode Characteristics - September 6, 2016

1) Define the following terms

p-type semiconductor

number of holes >> number of electrons

n-type semiconductor

electrons >> # holes

2a) Why do diodes allow current to flow in only one direction?

- majority carriers carry current p to n (low R)
  minority carriers carry current n to p (high R)

- a depletion zone blocks current. It requires +0.7V to remove the depletion zone and allow current to flow.
  +V makes smaller
  −V makes larger
- a potential energy barrier blocks current
  +V reduces the potential energy barrier
  −V increases " " " "

2b) Why is there a 0.7V drop across a silicon diode when it turns on? (i.e. why don't diodes turn on at 0V?)

- A depletion zone blocks current. It takes ≈0.7V to remove it and allow current to flow

- A potential energy barrier blocks current. It takes ≈0.7V to overcome it.

3) The VI characteristics for a red LED are shown below. For the following circuit

- Draw the load line, and
- Determine the operating point

Determine the resistance between A and B

Load Line	Ix	Vx
show on graph	7 4mA	1.8V

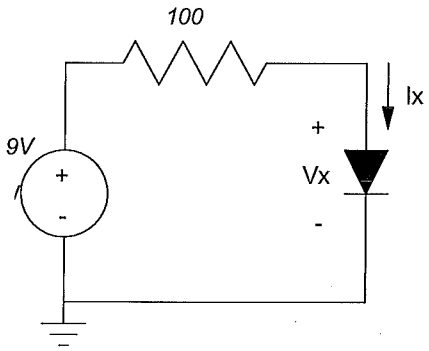

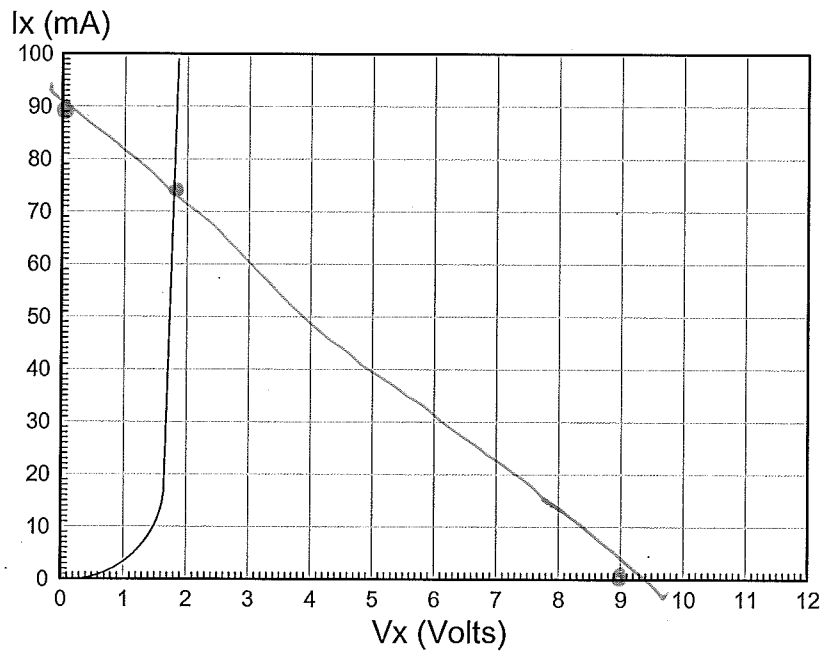

4) Write the voltage node equations for the following circuit. Assume the diode equations are

$$V_d = 0.052 \ln(10^7 I_d + 1) \qquad I_d = 10^{-7}\left(\exp\left(\frac{V}{0.052}\right) - 1\right)$$

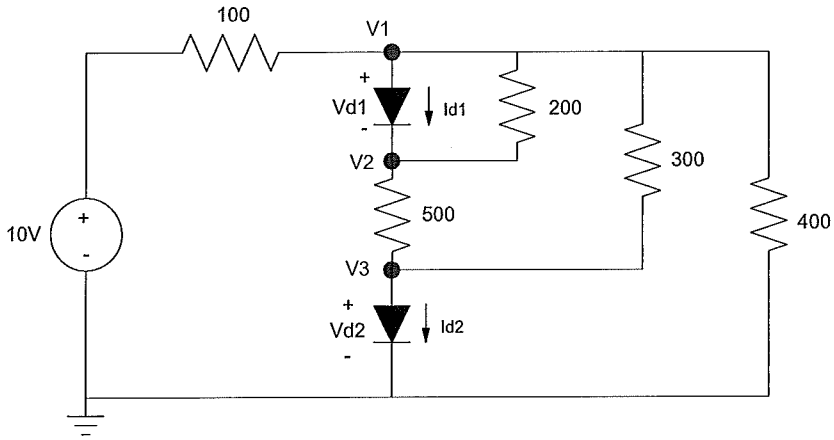

Diode Equations (in terms of V1, V2, V3)

$I_{d1} = 10^{-7}\left(\exp\left(\frac{V_1 - V_2}{.052}\right) - 1\right)$
$I_{d2} = 10^{-7}\left(\exp\left(\frac{V_3}{.052}\right) - 1\right)$

Voltage Node Equations

$\frac{V_1 - 10}{100} + I_{d1} + \frac{V_1 - V_2}{200} + \frac{V_1 - V_3}{300} + \frac{V_1}{400} = 0$
$-I_{d1} + \frac{V_2 - V_1}{200} + \frac{V_2 - V_3}{500} = 0$
$\frac{V_3 - V_2}{500} + \frac{V_3 - V_1}{300} + I_{d2} = 0$

5) Assume ideal silicon diodes (Von = 0.7V). Write the voltage node equations for the following circuit.

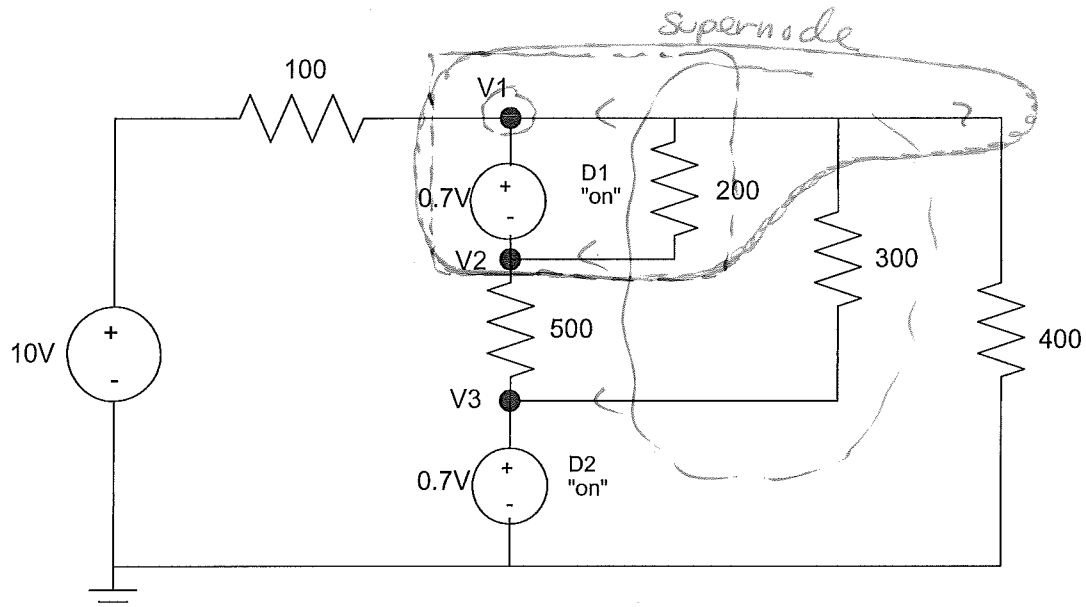

$V_1 - V_2 = 0.7$
$V_3 = 0.7$
$\frac{V_1 - 10}{100} + \frac{V_2 - V_3}{500} + \frac{V_1 - V_3}{300} + \frac{V_1}{400} = 0$

Bonus! What is the origin of the phrases "dead ringer" and "saved by the bell"?