ECE 320: Quiz #6 Name Key

DTL, TTL Logic, Op-Amps - October 13, 2016

1) Assume ideal transistors with Vf = 0.7V and β = 100. Determine the voltages and currents

I1	V2	I3	V4
290uA	2.1V	290uA	0.2V

Saturated

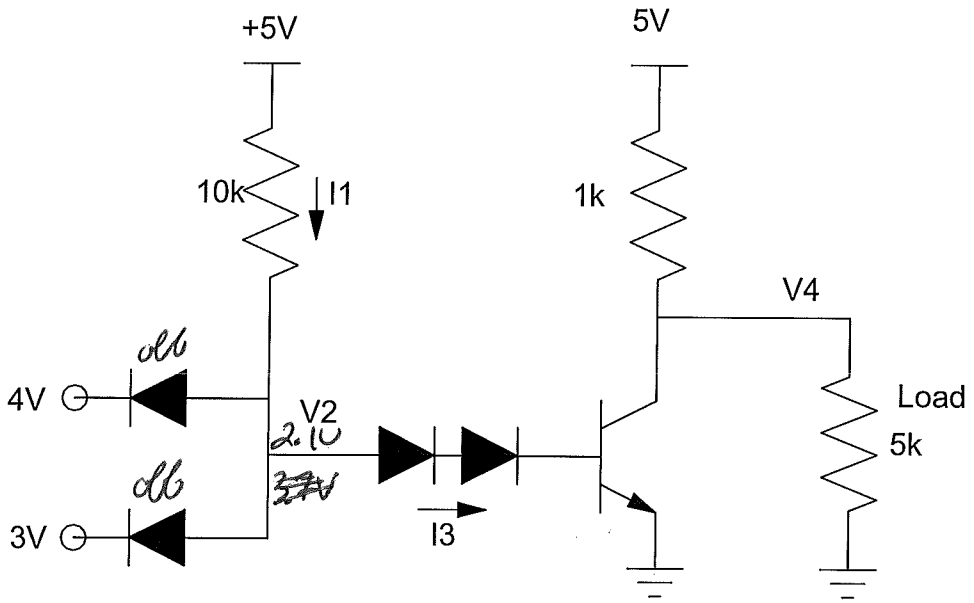

2) Assume ideal transistors with Vf = 0.7V and β= 100. Determine the voltages and currents

I1	I2	V3	V4
0	190uA	3.3V	0.2V

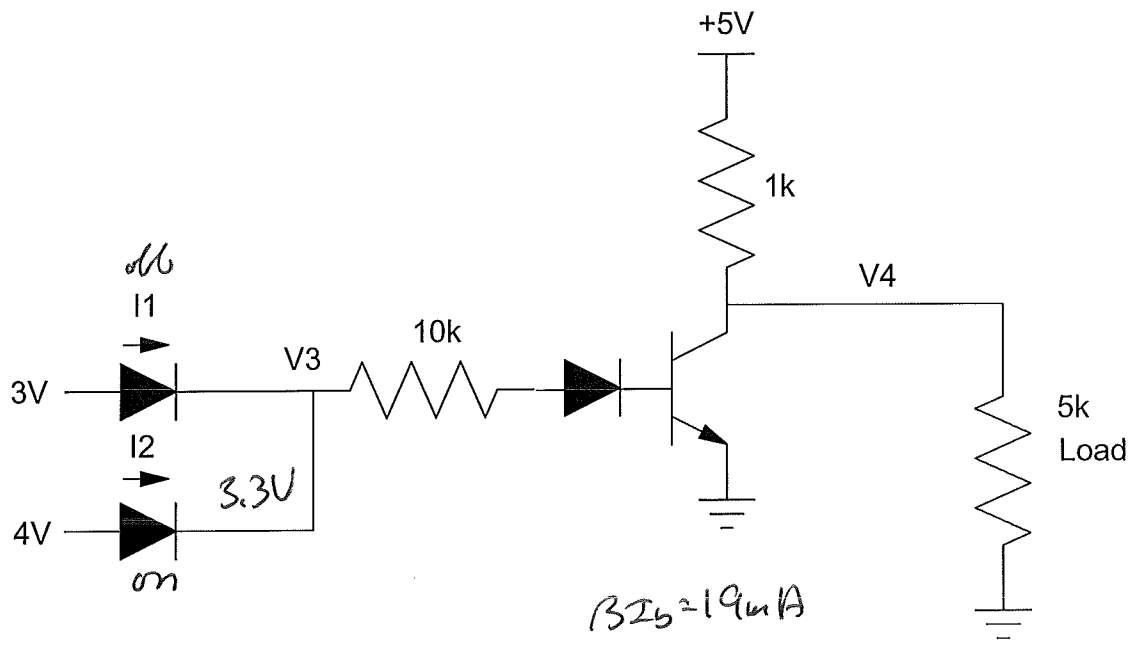

$\beta I_b = 19mA$

Saturated

$\frac{4-2.1}{10k} =$

3) Determine the voltages and currents for the following H-bridge. Assume all transistors are ideal silicon transistors with Vf = 0.7V and $\beta = 100$

V1	Ib	Ic	V4
1.4V	396μA	4.76mA	0.2V

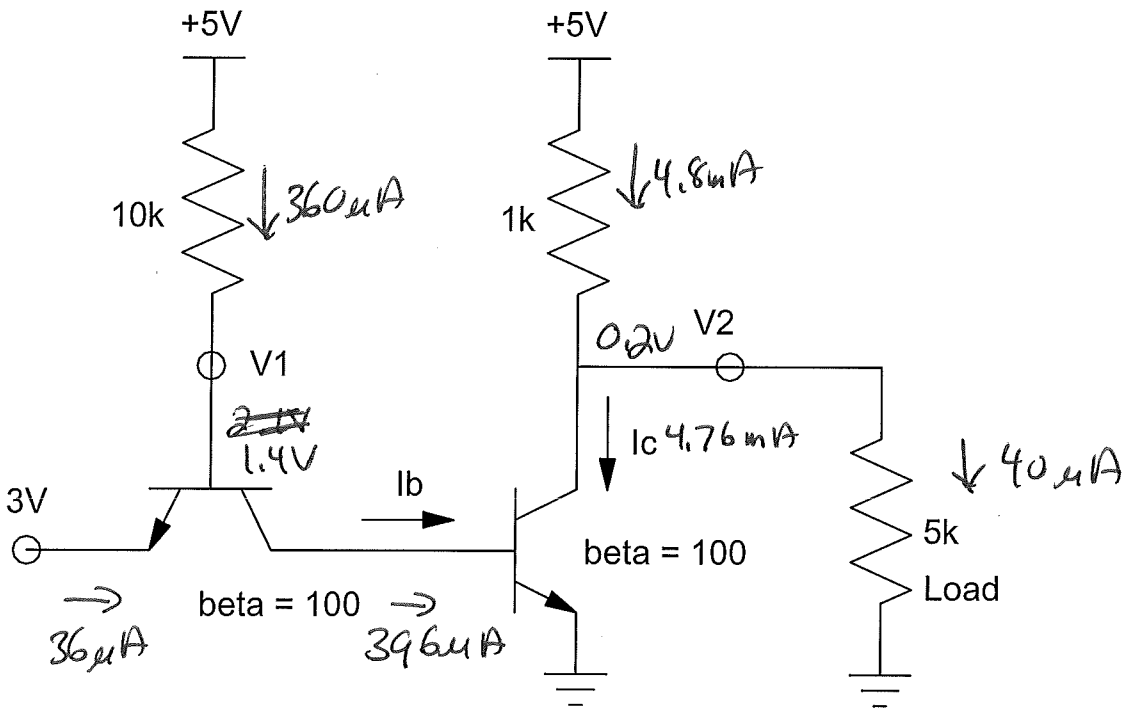

4) Write the voltage node equtions for the following circuit (non-ideal op-amp)

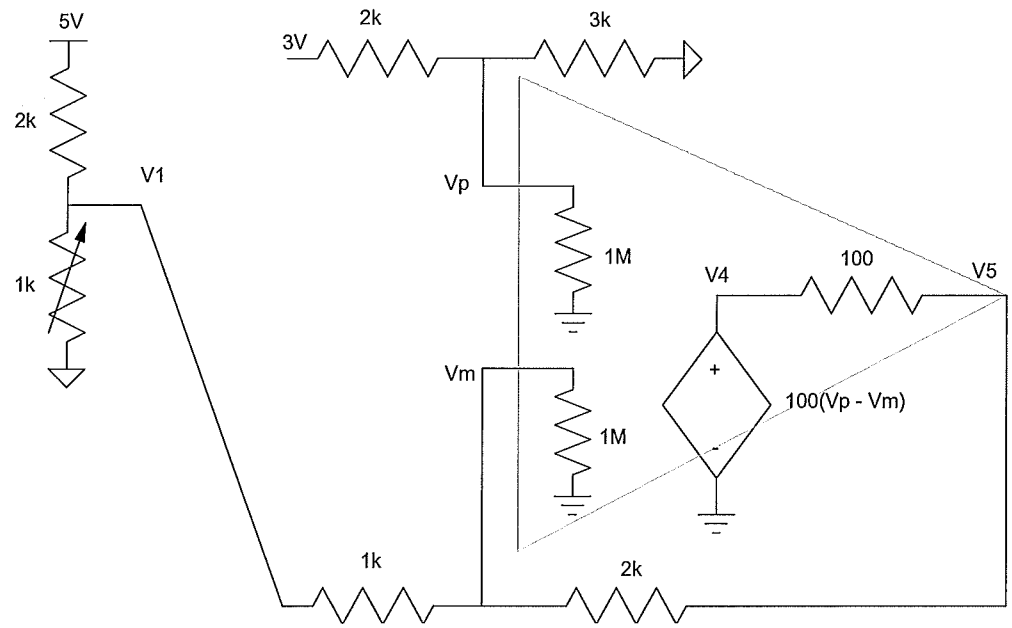

$\frac{V_1-5}{2k} + \frac{V_1}{1k} + \frac{V_1-V_m}{1k} = 0$
$\frac{V_m-V_1}{1k} + \frac{V_m}{1m} + \frac{V_m-V_5}{2k} = 0$
$\frac{V_5-V_4}{100} + \frac{V_5-V_m}{2k} = 0$
$V_4 = 100(V_p-V_m)$
$\frac{V_p-3}{2k} + \frac{V_p}{3k} = 0$

5) Assume an ideal op-amp. Write 4 equations to solve for the 4 unknown voltages.

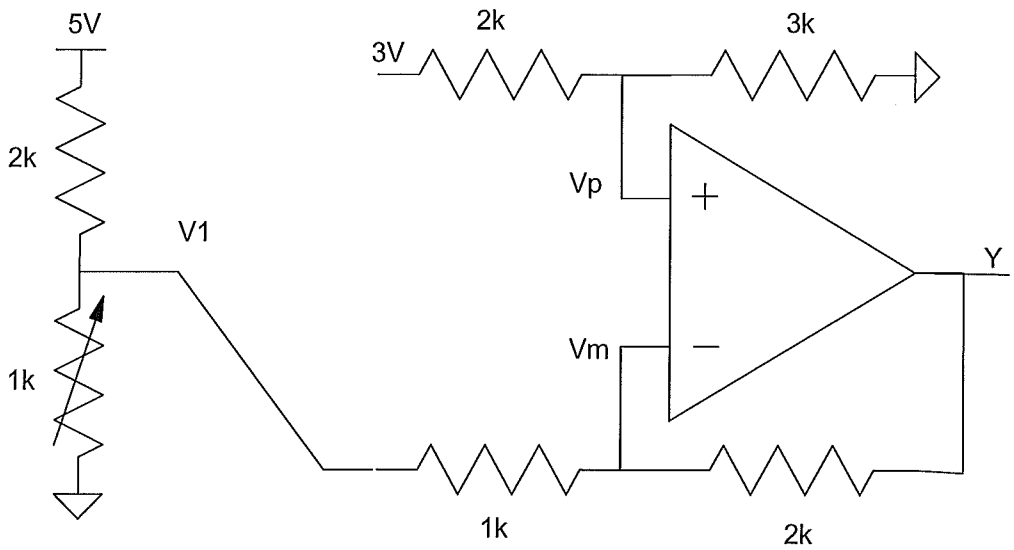

$V_p = V_m$
$\frac{V_p - 3}{2k} + \frac{V_p}{3k} = 0$
$\frac{V_m - Y}{2k} + \frac{V_m - V_1}{1k} = 0$
$\frac{V_1 - 5}{2k} + \frac{V_1}{1k} + \frac{V_1 - V_m}{1k} = 0$

Bonus! According to the North Dakota Department of Health, how many oil spills occured in North Dakota over the last 12 months?

915 contained
270 not contained
1185 total