# ECE 320 - Homework #1

Matlab, PartSim, Solving f(x) = 0.  Due Monday, August 29th

1)  Given 2 equations with 2 unknowns

$$V = 10 - 1000I$$

$$V = 0.052 \cdot \ln(10^7 \cdot I + 1)$$

1a)  Solve in Matlab using graphical methods

```
-->I = [0:0.001:1]' * 0.01;
-->V1 = 10 - 1000*I;
-->V2 = 0.052*log(1e7*I + 1);

-->plot(V1,I*1000,V2,I*1000);
-->xlabel('Volts');
-->ylabel('Current (mA)');
-->xgrid(4)
```

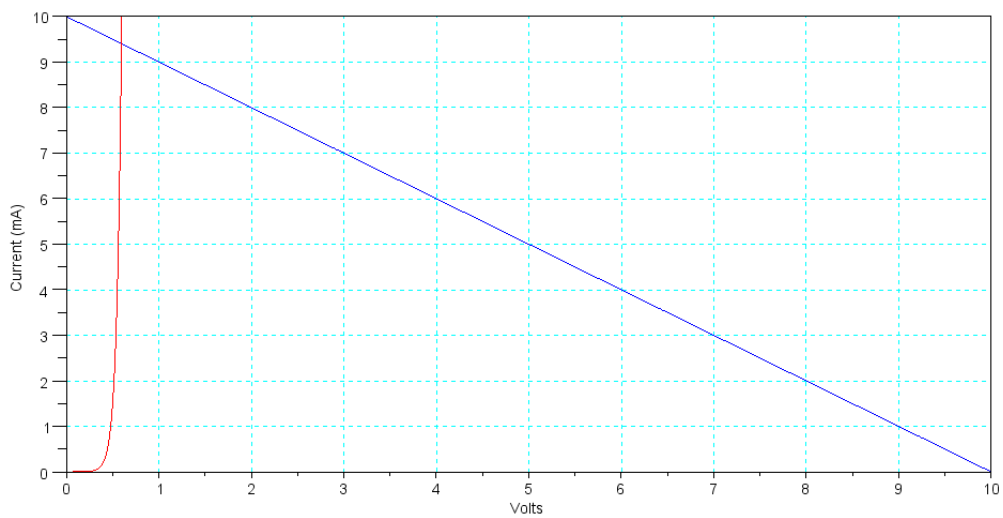


Solution:  (0.7V, 9.4mA)

1b)  Solve numerically to find V and I

Use *fminsearch()*

First, set up a function in Matlab to compute the error

```
function [ J ] = Prob1( I )
      V1 = 10 - 1000*I;
      V2 = 0.052*log(1e7*I + 1);
      E = V1 - V2;
      J = E^2;
      end
```

Now solve using *fminsearch().* Start with an initial guess of 9mA

```
>> Prob1(0.009)

    0.1655

>> I = fminsearch('Prob1',0.009)

I =

    0.0094
```

Check that the error is zero:

```
>> Prob1(I)

  1.0962e-005
```

The solution is then

```
>> V = 10 - 1000*I

    0.5922
```

**answer: (0.5922V, 9.4mA)**

2) Given 2 equations with 2 unknowns

$$V = 10 - 1000I$$

$$I = 0.1 \cdot (V - 2)^2$$

2a) Solve in Matlab using graphical methods

```
-->V = [0:0.01:10]';
-->I1 = (10 - V) / 1000;
-->I2 = 0.1* ( (V - 2) .^ 2 );

-->plot(V,I1*1000,V,I2*1000)
-->xgrid(4);
-->xlabel('Volts');
-->ylabel('Current (mA)');
```

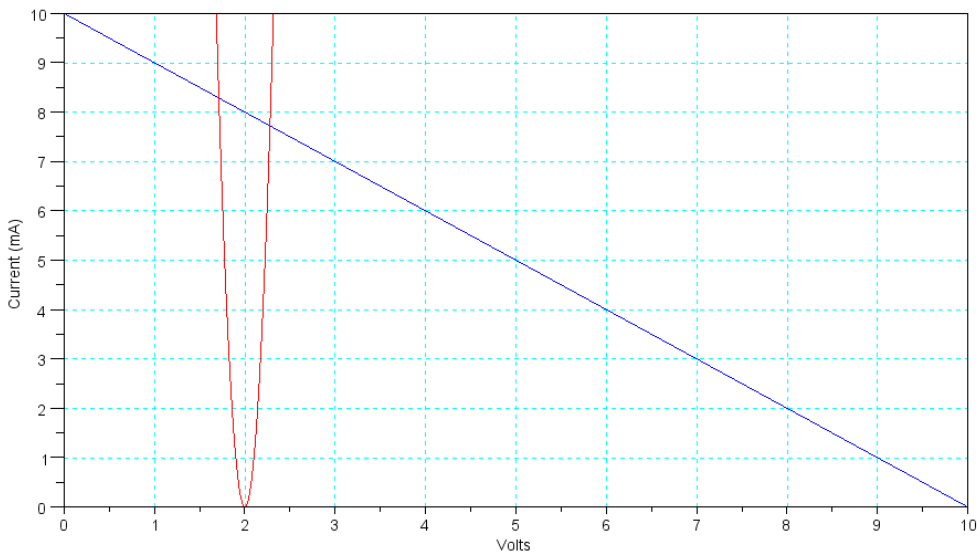


Solution: (2.2V, 7.7mA) and (1.8V, 8.2mA)

2b) Solve numerically to find V and I

First, set up a cost funciton in Matlab:

```
function [ J ] = Prob2( V )

   I1 = (10 - V) / 1000;
   I2 = 0.1* ( (V - 2) .^ 2 );

   E = I1 - I2;

   J = E^2;

   end
```

Solve using *fminsearch()*

Start with a guess close to the right solution:

```
>> V = fminsearch('Prob2',2.2)

    2.2779

>> Prob2(V)

  1.1692e-013

>> I = (10 - V) / 1000

    0.0077
```

One solution is: **( 2.2779V, 7.7mA )**

Now find the solution close to the left solution:

```
>> V = fminsearch('Prob2',1.8)

    1.7121

>> Prob2(V)

  4.4340e-014

>> I = (10 - V) / 1000

    0.0083
```

The other solution is **( 1.7121V, 8.3mA )**

3) Solve using *fminsearch()* in Matlab

$$\left(\frac{V_1-10}{100}\right)+\left(\frac{V_1-V_2}{200}\right)+\left(\frac{V_1}{300}\right)+I_{d1}=0$$

$$I_{d1}+\left(\frac{V_1-V_2}{200}\right)=I_{d2}$$

$$I_{d1}=10^{-7}\cdot(e^{20(V_1-V_2)}-1)$$

$$I_{d2}=10^{-7}\cdot(e^{20V_2}-1)$$

Create a cost function in Matlab:

```
function [ J ] = Prob3( Z )

   V1 = Z(1);
   V2 = Z(2);
   I1 = Z(3);
   I2 = Z(4);

   E1 = (V1-10)/100 + (V1-V2)/200 + (V1/300) + I1;
   E2 = I1 + (V1-V2)/200 - I2;
   E3 = I1 - 1e-7*(exp(20*(V1-V2))-1);
   E4 = I2 - 1e-7*(exp(20*V2)-1);

   J = E1^2 + E2^2 + E3^2 + E4^2;

   end
```

Solve using *fminsearch()*. Use problem #4 as a starting guess:

```
>> Z = fminsearch('Prob3',[1.4,0.7,0.01,0.01])

      V1        V2        I1        I2
    1.3594    0.6807    0.0784    0.0818
```

Check the error:

```
>> Prob3(Z)

  2.8525e-009
```

Close to zero, so the solution above is almost correct.

4) Input this circuit into PartSim to solve for the node votlages

This took a little effort to get it to show the currents. Adding a 0V source in series with the diodes seemed to work:

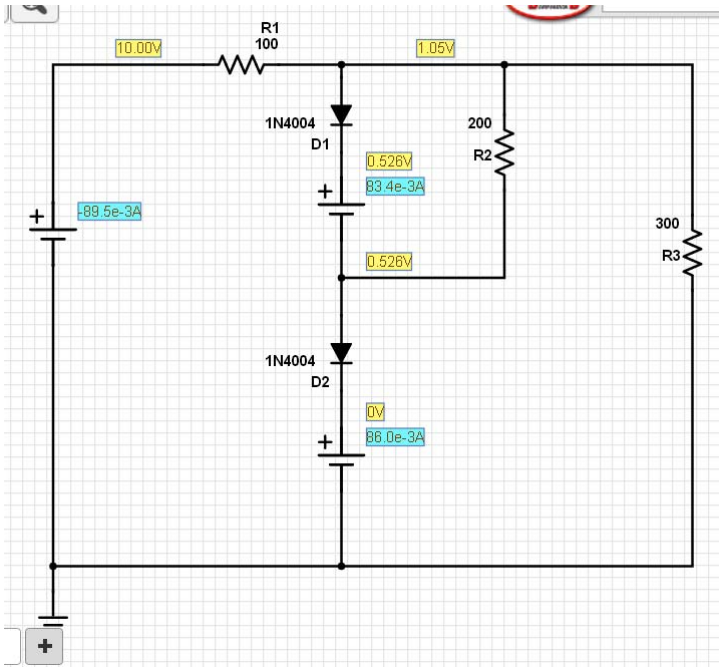


The net results is

V1 = 1.05V

V2 = 0.526V

Id1 = 83.4mA

Id2 = 86.0mA