ECE 320 - Homework #7

DTL, TTL Logic. Due Monday, October 10th

DTL Logic:

1) Determine the voltages and currents for the following DTL NOR gait:

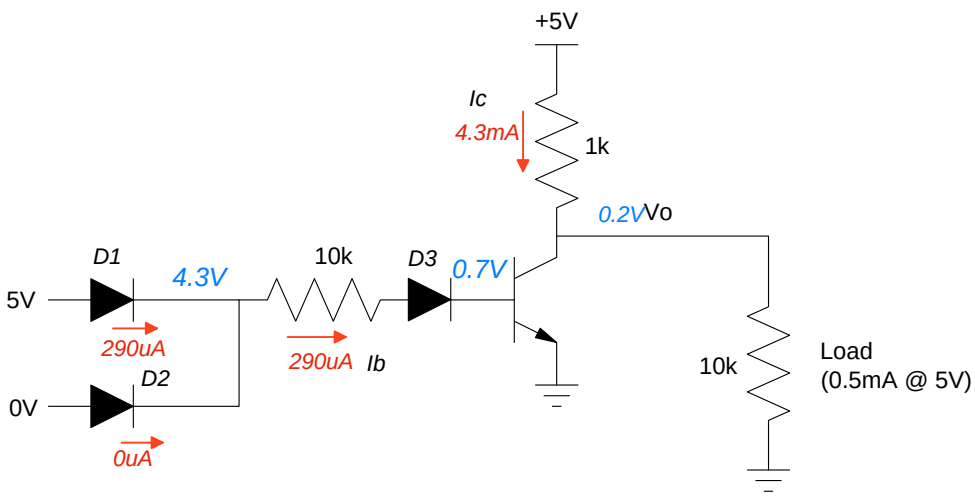

Diode D1 is on, Diode D2 is off

$$I_b = \left(\frac{5V - 2.1V}{10k}\right) = 290\mu A$$

This allow up to 29mA to flow in the transistor

$$\beta I_b = 29.0mA$$

The maximum current in Ic is

$$\max(I_c) = \left(\frac{5V - 0.2V}{1k}\right) = 4.8mA < 29mA$$

so the transistor is saturated.

2) Check your analysis with PartSim (or similar program)

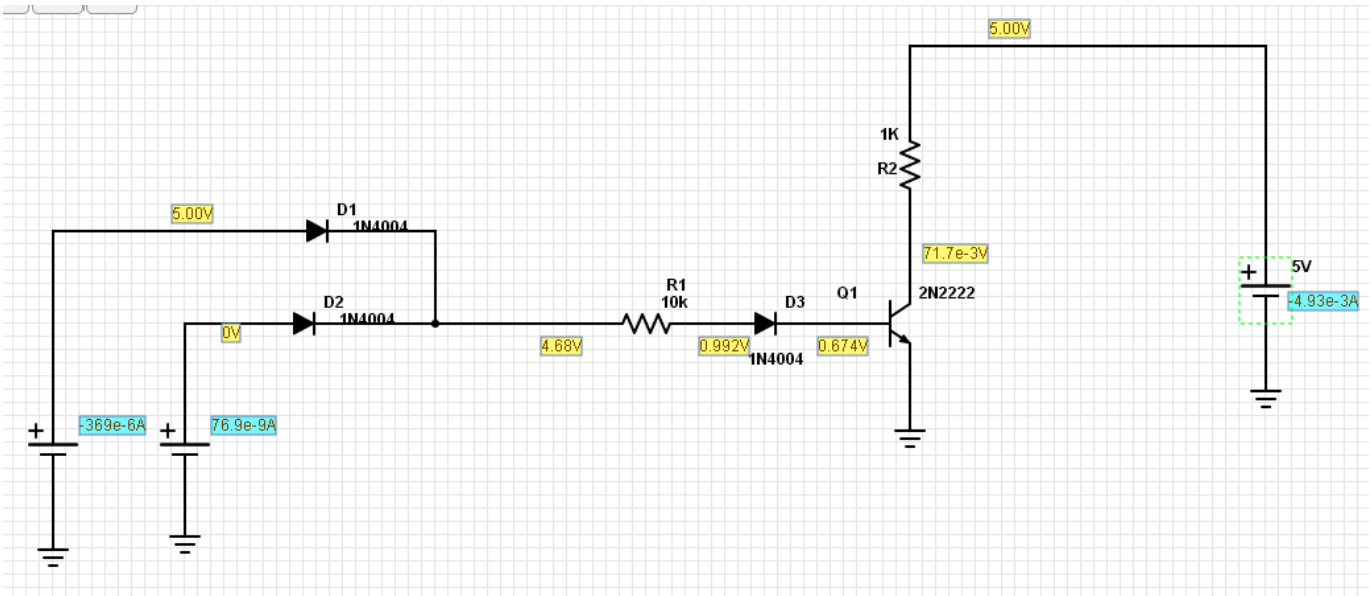

Parameter	Computed	PartSim
Id1	290uA	369uA
Id2	0mA	-0.076uA
Id3	290uA	369uA
Ic	4.8mA	4.93mA
Vc	200mV	71.7mV

3) Determine the voltages and currents for the following DTL NAND gait:

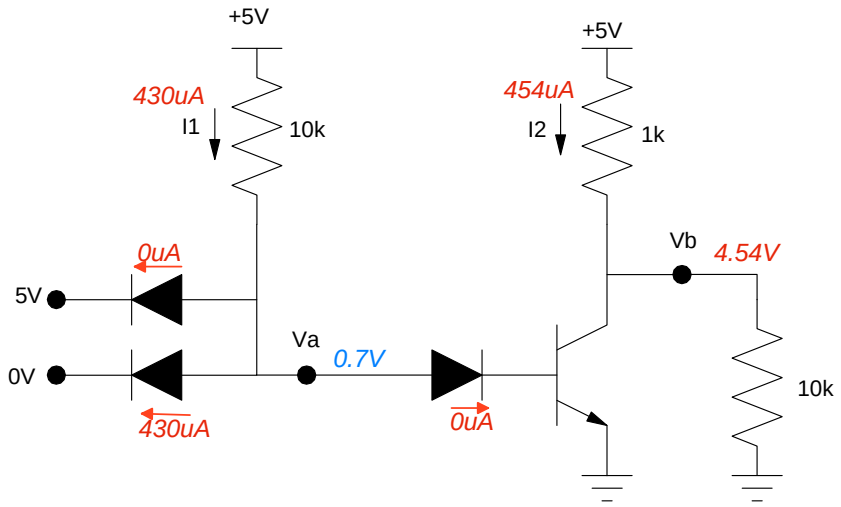

4) Check your analysis with PartSim (or similar program)

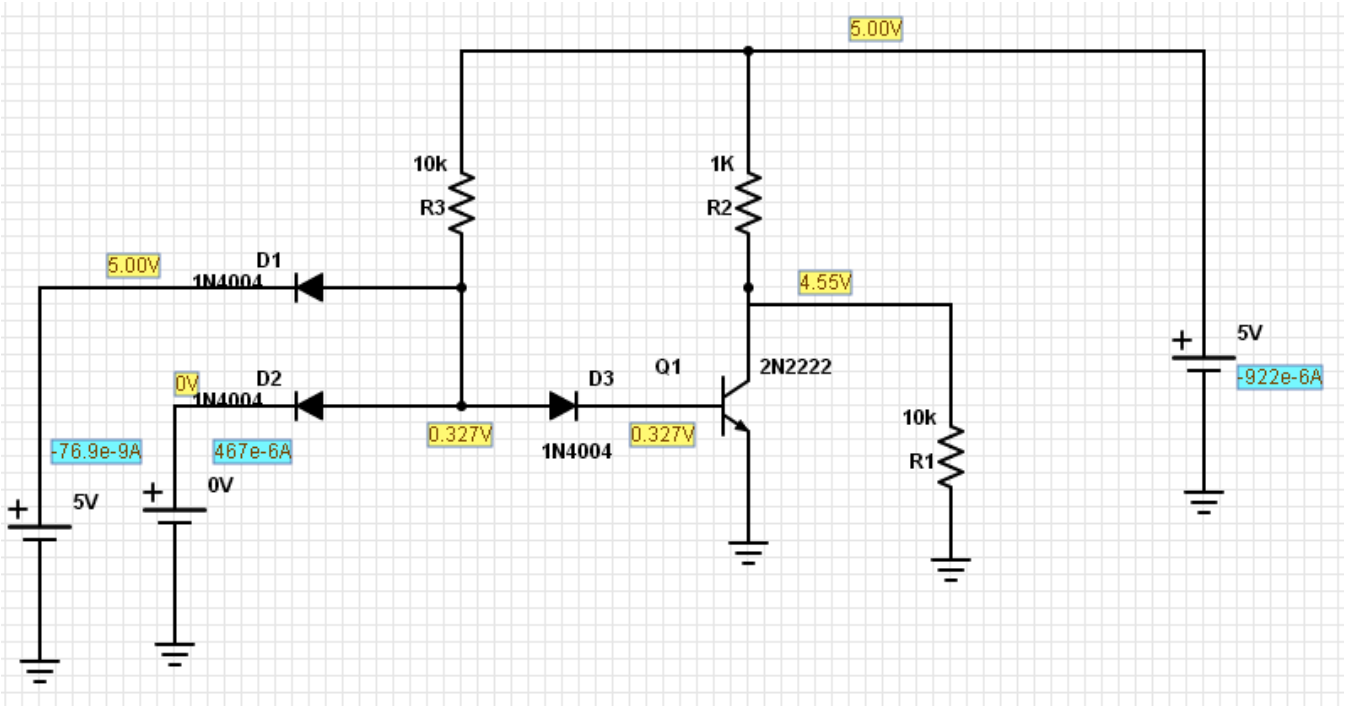

Parameter	Computed	PartSim
Id1	0uA	-0.077uA
Id2	430uA	467uA
Id3	0uA	0uA
Vy	4.4V	4.55V

TTL Logic

5) Determine the voltages and currents for the following TTL inverter

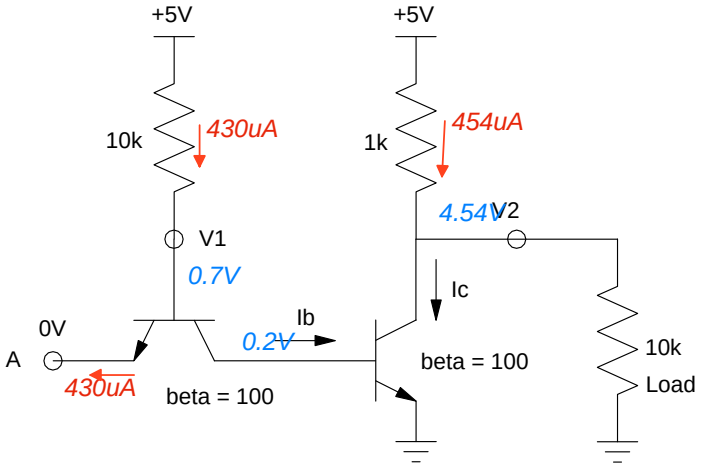

In PartSim

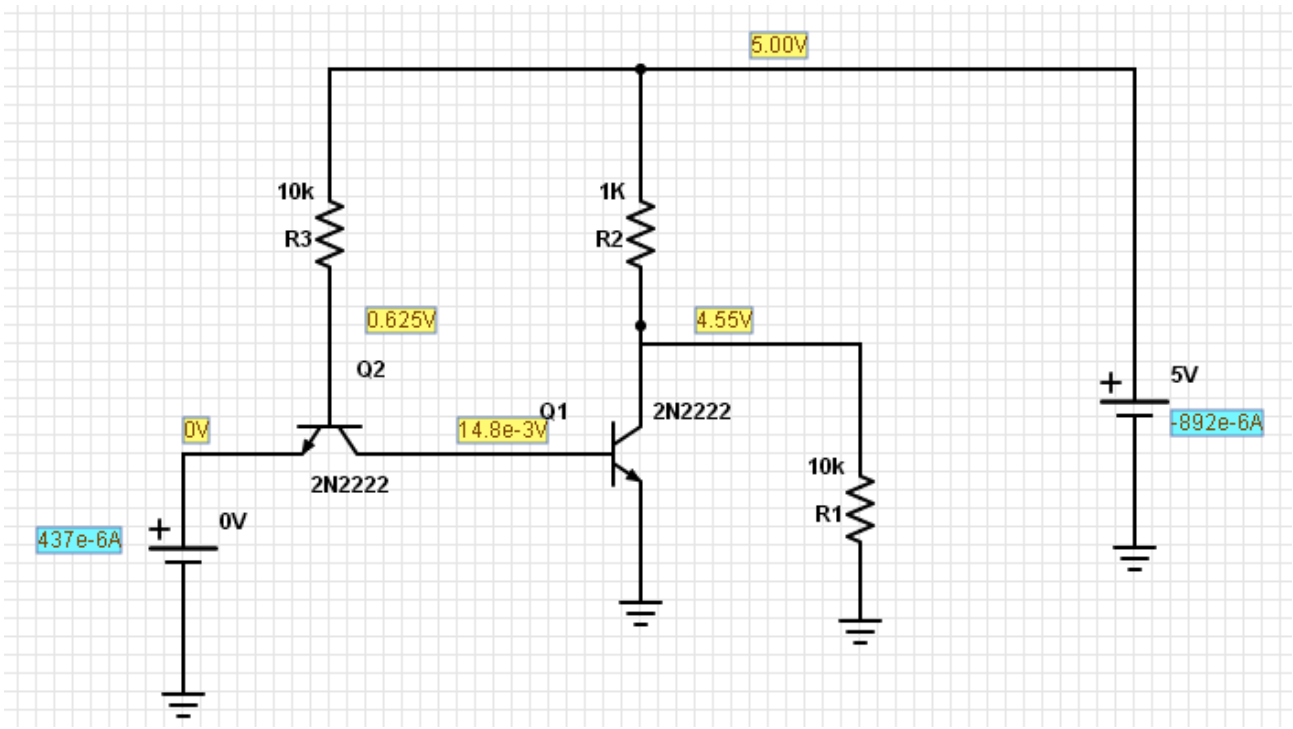

Parameter	Computed	PartSim
Iin	430uA	437uA
Vb1	200mV	14.8mV
Vb2	700mV	625mV
Vc1	4.45V	4.55V

Determine the voltages and currents for the following TTL inverter

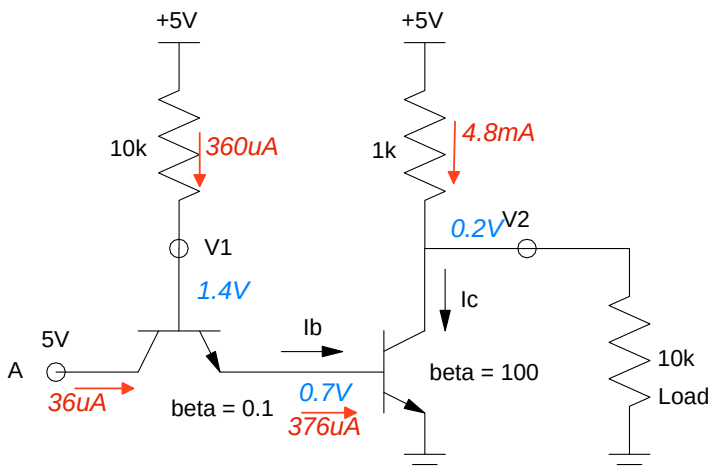

In PartSim

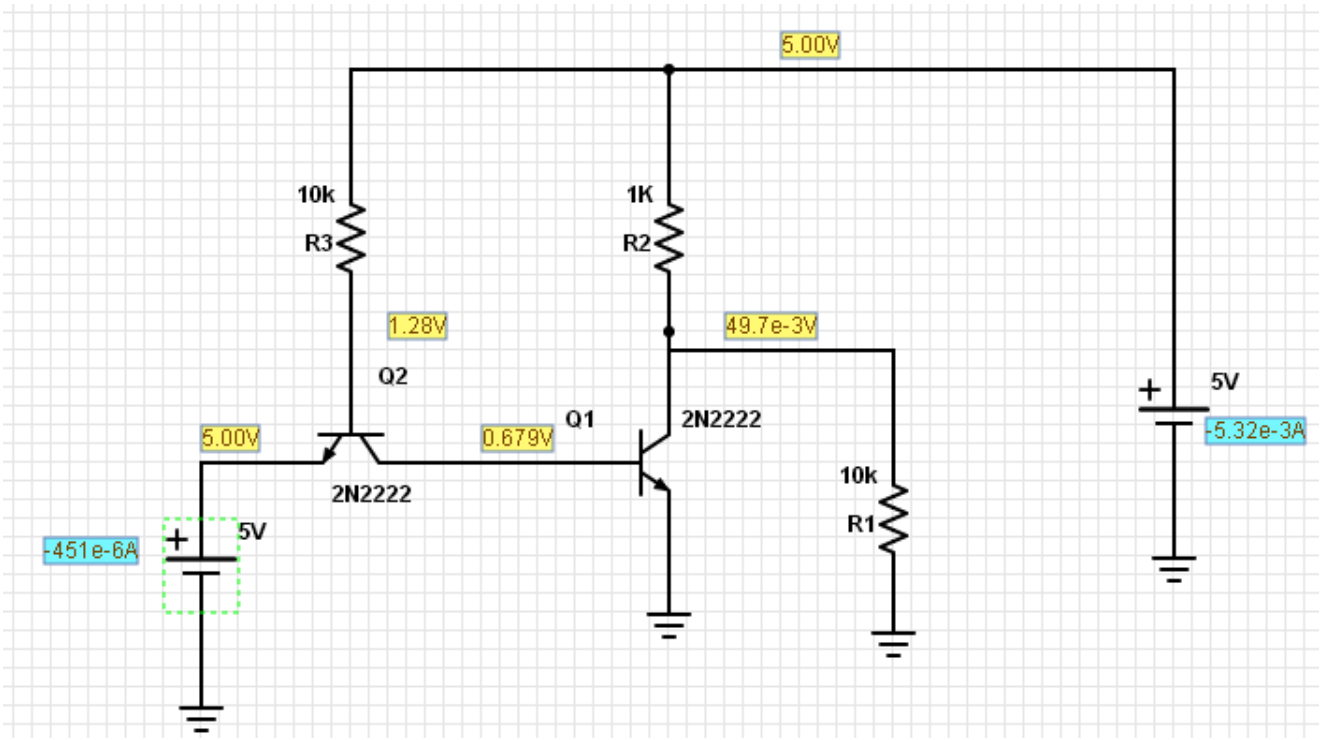

Parameter	Computed	PartSim
Iin	36uA	451uA
Vb1	0.7V	0.679V
Vb2	1.4V	1.28V
Vc1	0.2V	0.0497V

Term Project:

Specify a device which uses two different circuits we cover in ECE 320.

7) Overall Requirements: Specify what the entire system does in terms of

- Inputs
- Outputs
- Relationship: How the inputs affect the outputs

8) Project Breakdown: Show how this device can be build using two different circuits covered in ECE 320. For each circuit, specify the

- Inputs
- Outputs
- Relationship: How the inputs affect the outputs