ECE 320 - Homework #8

Comparitors, Schmitt Triggers, DTL Logic. Due Monday, October 16th, 2017

Assume a temperature sensor has the following lux / temperature relationship

$$R = 1000 \cdot \exp\left(\frac{3903}{T} - \frac{3903}{298}\right)\ \Omega$$

where T is the temperature in degrees Kelvin.

Comparitors

1) Design a circuit to turn on a heater if the temperature drops below 5C:

- Vo = 0V when T > 5C
- Vo = 10V when T < 5C

Schmitt Triggers

2) Design a circuit with hysteresis to turn on the heater:

- Vo = 10V when T < 5C
- Vo = 0V when T > 10C
- no change when 5C < T < 10C

DTL Logic

3) Determine the voltages for the following DTL AND gate. Assume ideal diodes and transistors with

- Vbe -= 0.7V
- Vce(sat) = 0.2V
- $\beta = 100$

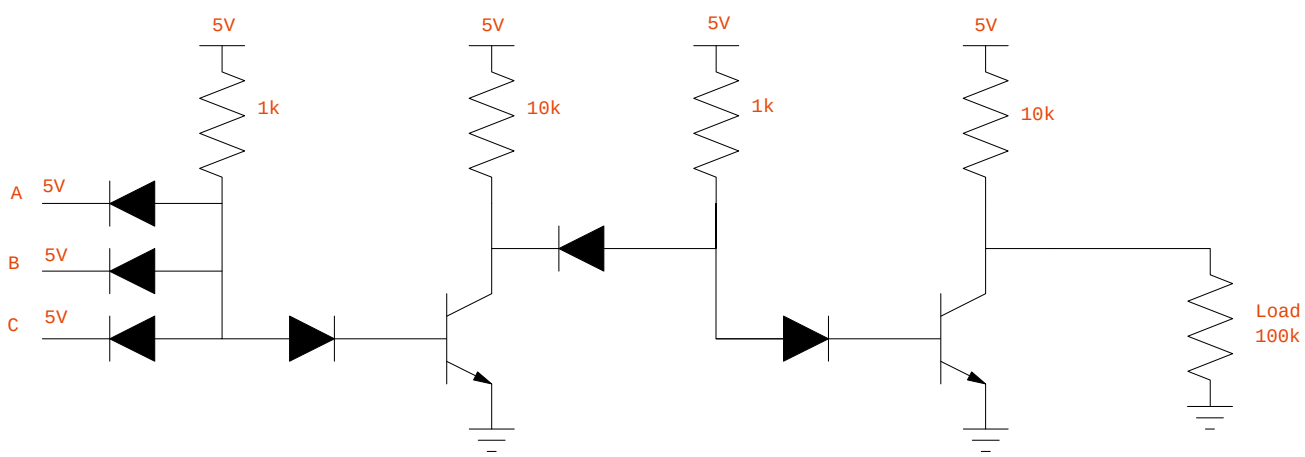

4) Determine the voltages for the following DTL AND gate

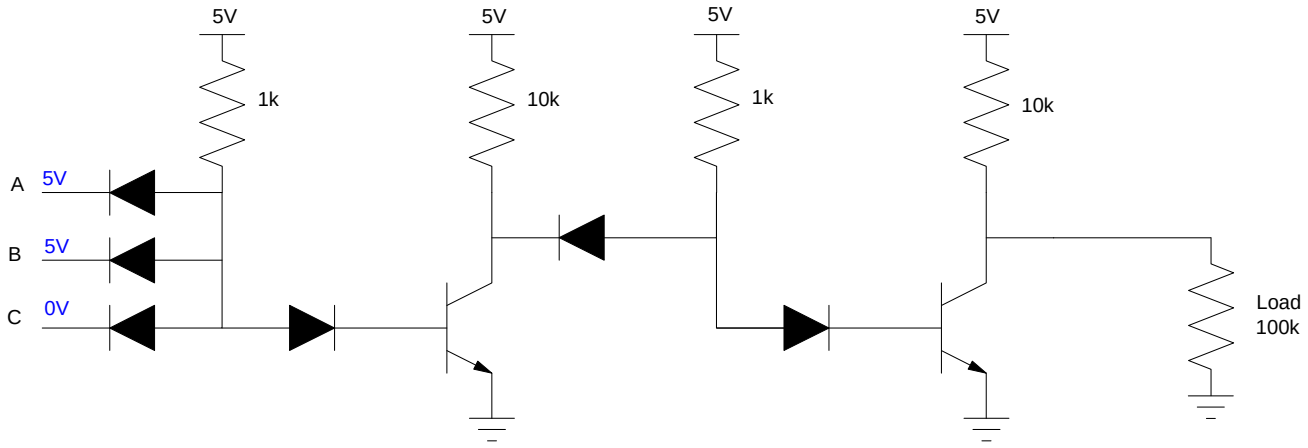

Lab: Term Project (part 1)

Design one part of your term project. Some suggestions are:

- Use a Schmitt Trigger (part 1) and an AC to DC converter (part 2) to drive a 12V DC motor when the temperature is below 5C.
- Use a DTL NAND gate (part 1) and an H-bridge (part 2) to drive a 10V DC motor forward when switch when $\overline{AB}$ is true, reverse when false
- Use an AC to DC converter (part 1) to convert 20Vp 60Hz AC to 20VDC, capable of 100mA (part 1), which then drives a DC to DC converter (part 2) which drives a DC motor from 0V to 20V.
- Other

5) Requirements: Specify the

- Inputs
- Outputs
- How they relate

6) Analysis: Calculate the values of the components in your circuit to meet the requirements.

7) Simulation: Check your analysis using a circuit simulator, such as PartSim

8) Validation: Build your circuit and verify it meets the requirements