ECE 320 - Quiz #4 - Name _____

Clipper, Max/Min, AC to DC Converters. September 21, 2017

1) Design a clipper circuit to implement the following function with an accuracy of +/- 0.5V

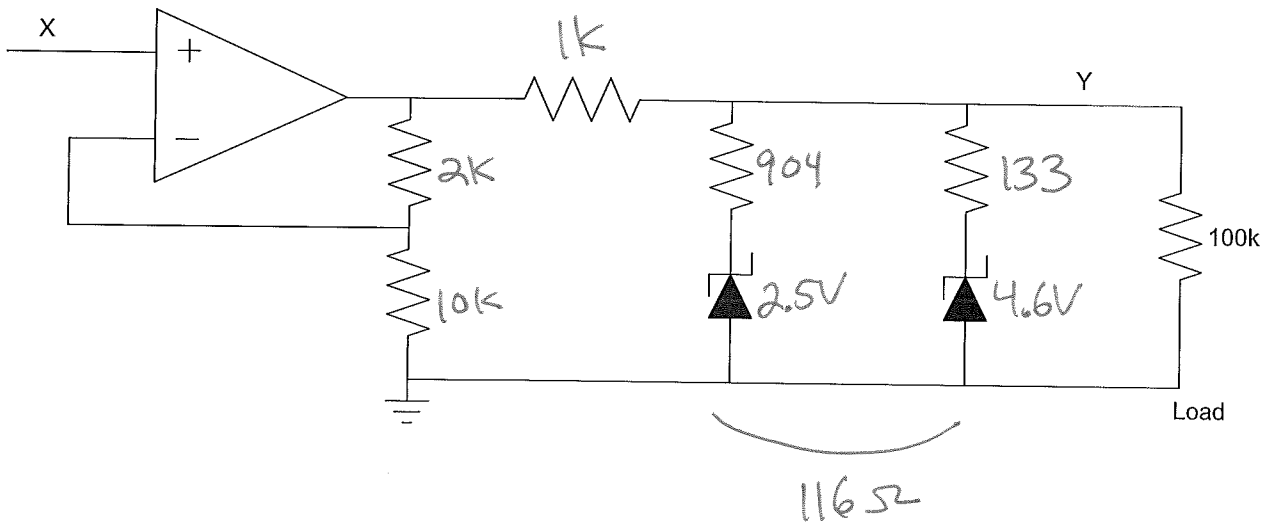

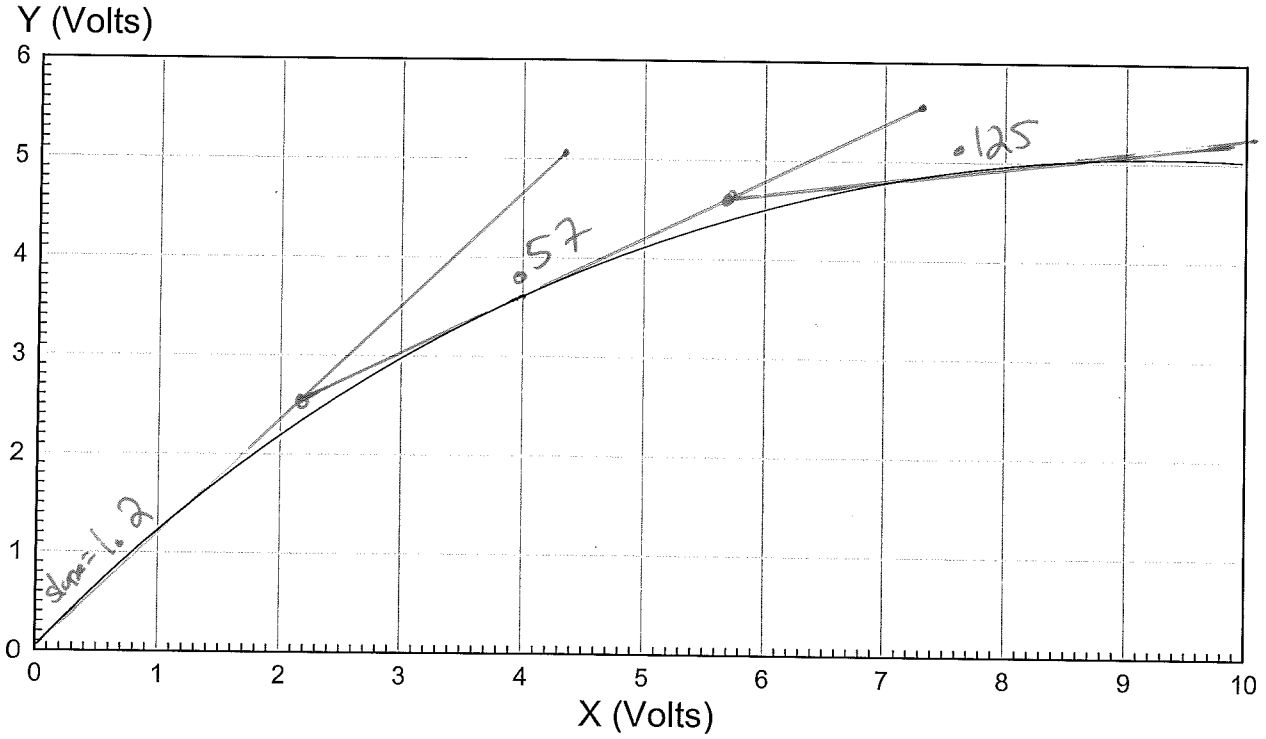

2) Assume ideal silicon diodes (Vf = 0.7V). Determine the currents I1 .. I4

I1	I2	I3	I4
0	3.65mA	.65mA	0

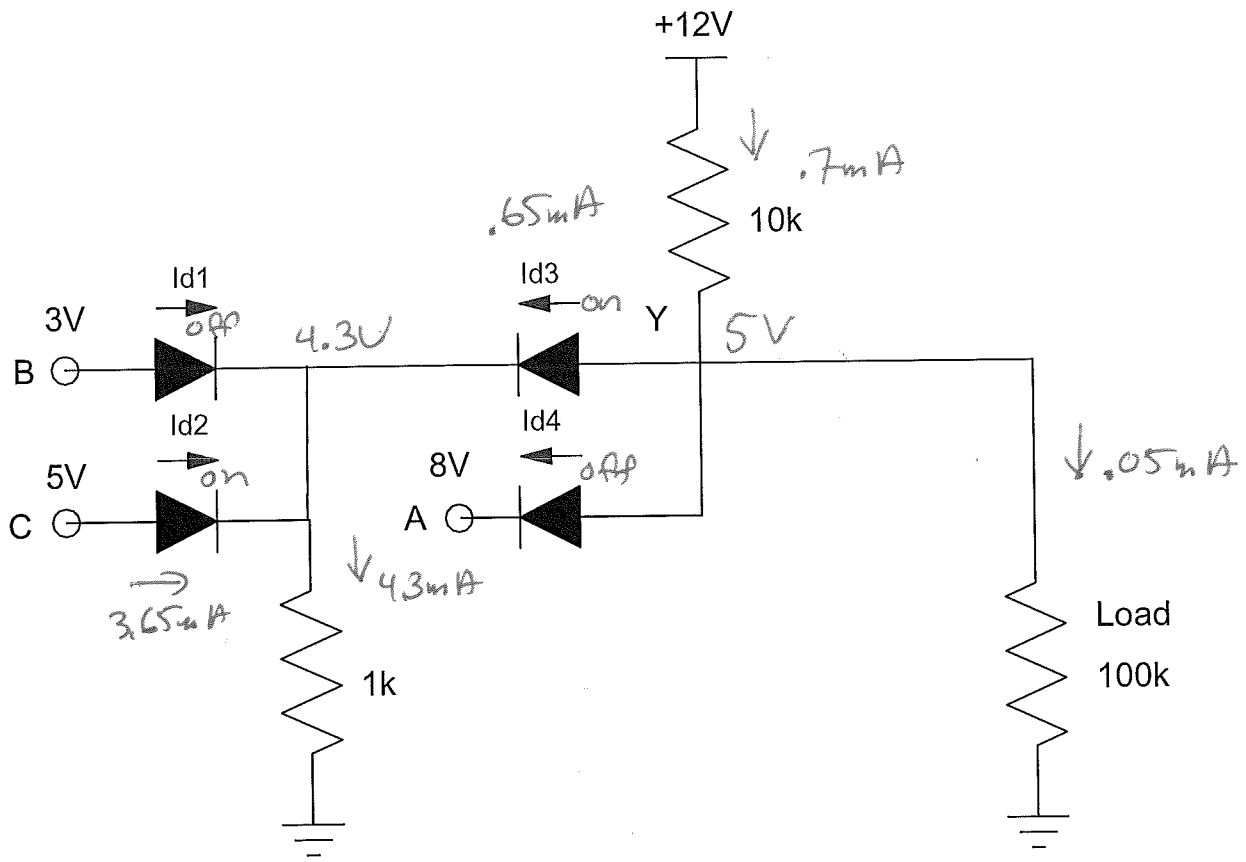

3) Assume ideal silicon diodes (Vf = 0.7V). Determine the currents I1 .. I4

I1	I2	I3	I4
7.3mA	0	0	1.126mA

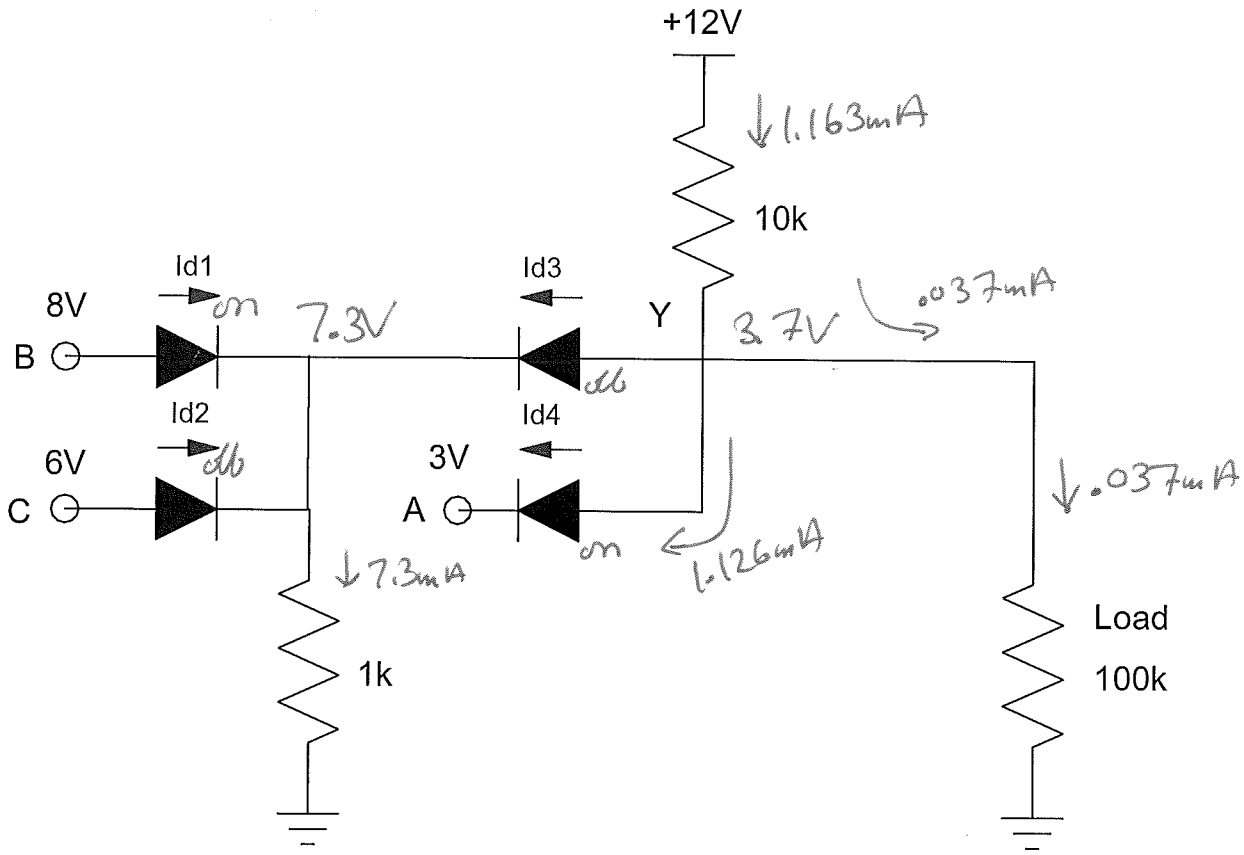

4) AC to DC Analysis: For the vollowing AC to DC converter, determine the voltages at V1 and V2

V1		V2	
max(V1)	min(V1)	mean(V2) DC value of V2	V2pp AC value of V2
19.3V	16.58V	17.94V	.696V_{pp}

2.716V

avg of $\max V_1$, $\min V_1$

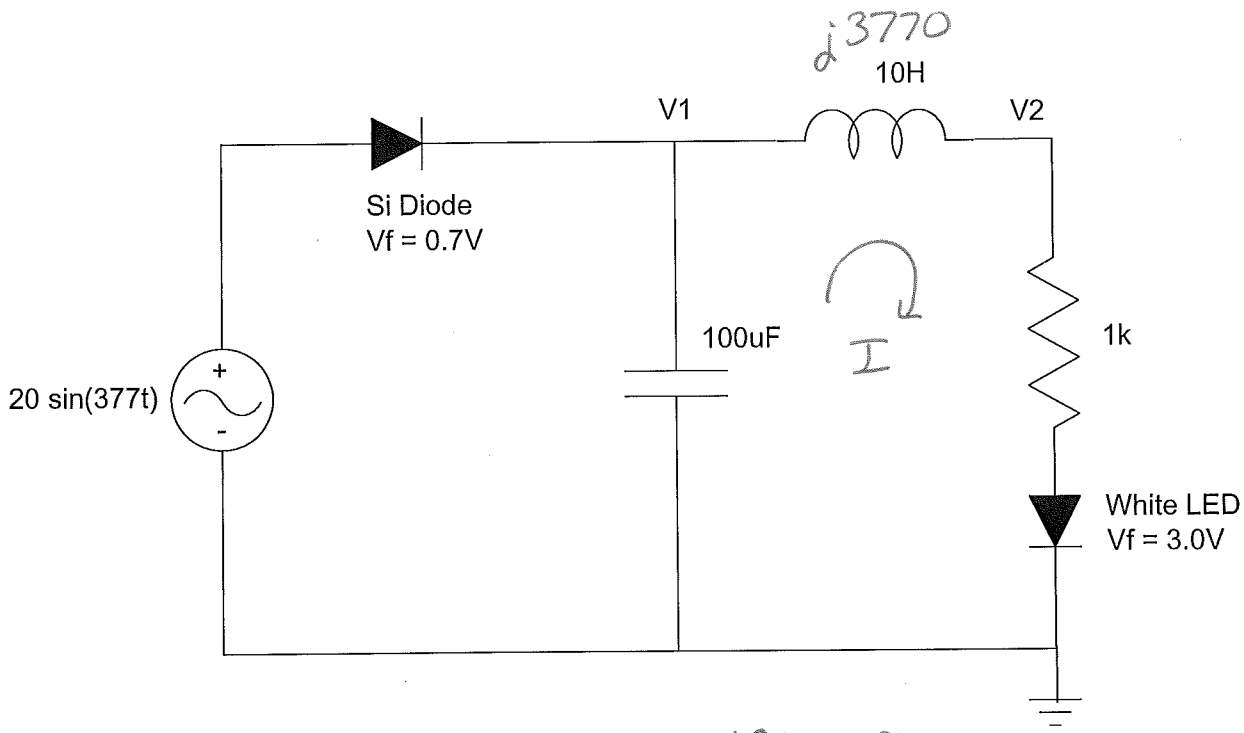

$$I = \frac{19.3V - 3V}{1k} = 16.3mA$$

$$I = C\frac{dV}{dt}$$

$$16.3mA = 100\mu F \cdot \frac{dV}{1/60s}$$

$$dV = 2.716V_{pp}$$

$$V_{2pp} = \left|\frac{1000}{1000 + j377}\right| \cdot (2.716V_{pp})$$

$$= .696V_{pp}$$

5) AC to DC (design). Determine

- R so that the load draws 20mA
- C so that the ripple at V1 is 1Vpp
- L so that the ripple at V2 is 200mVpp

R Set the current to the LED at 20mA	C 1Vpp ripple at V1	L 200mVpp ripple at V2
790 Ω	333μF	10.48 H

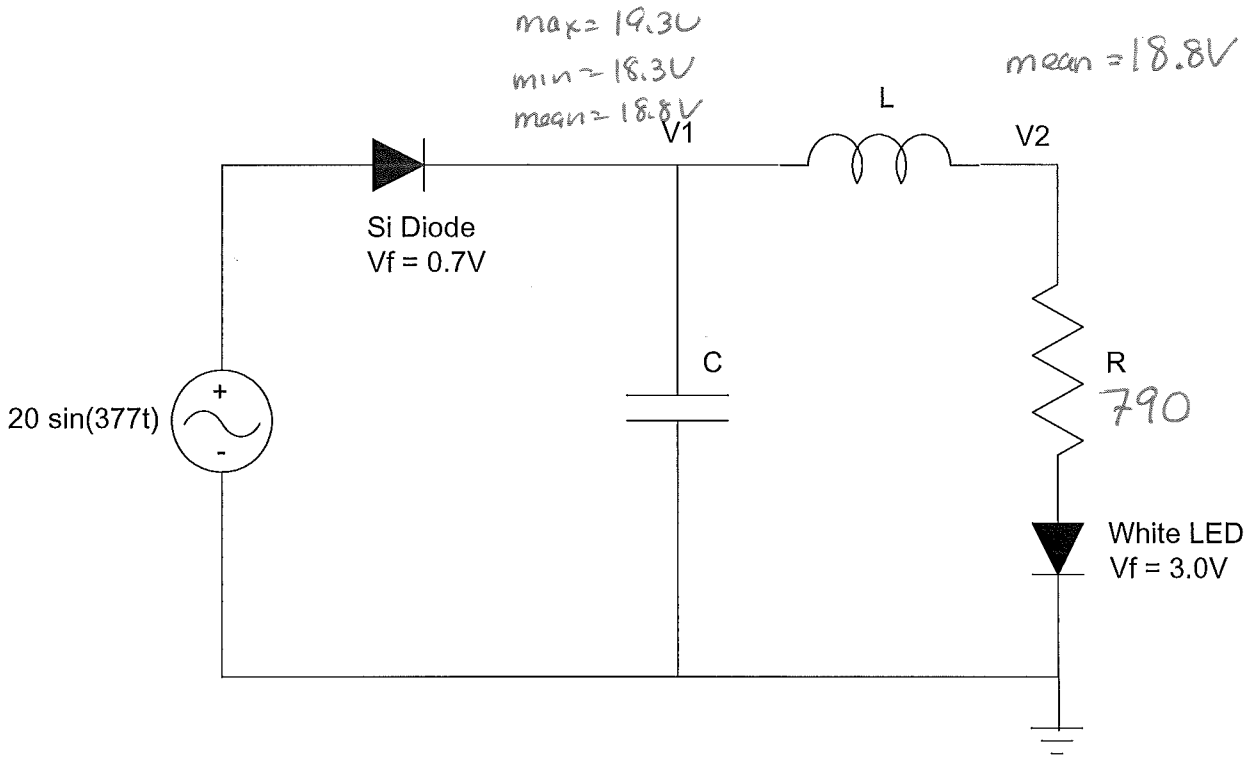

$$R = \frac{18.8V - 3V}{20mA} = 790$$

$$I = C\frac{dV}{dt}$$

$$.02 = C \cdot \frac{1Vpp}{1/60\,s}$$

$$C = 333\mu F$$

$$j\omega L = 5 \cdot 790$$

$$\omega L = 3950$$

$$L = 10.48\,H$$

Bonus! Why is the Arctic melting? Perhaps it's because the Earth is getting warmer.

NASA Goddard has been keep records of global temperaturs since 1880 (135 years of data) with the deviation from the mean shown below. Based upon this data, when will global temperatures be +6C above their historic mean - the point where models predict the ice caps will be gone?

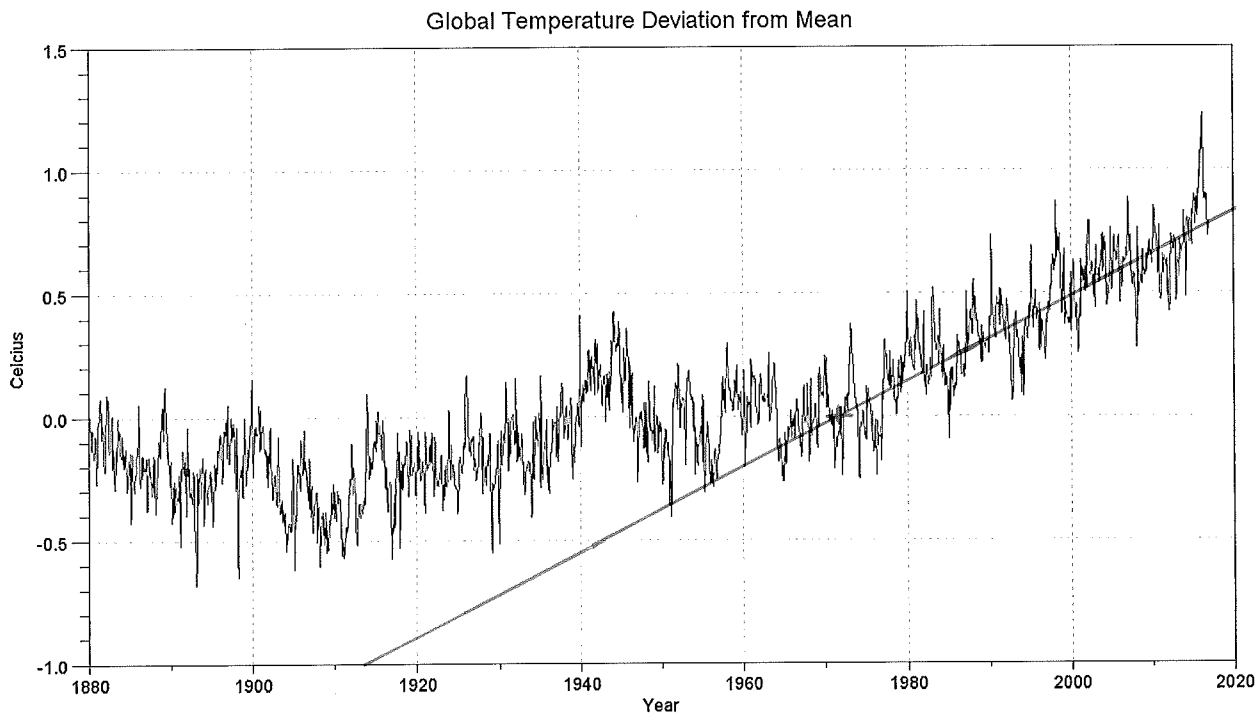

$$\text{Slope} = \frac{1.6^\circ}{107 \text{ years}} = .0015^\circ/\text{year}$$

Source: https://data.giss.nasa.gov/gistemp/

$$\frac{+6^\circ}{.0015^\circ/y} = 4012 \text{ years}$$

≈ year 2371