ECE 320: Quiz #7: Name _____

Comparitors, Schmitt Triggers, DTL Logic. October 18, 2017

1) A light sensor has the following light / resistance relationship.

$$R = \frac{100{,}000}{Lux}\ \Omega$$

Design a comparitor so that the output is

- Y = 0V when the light level is > 20 Lux
- Y = 10V when the light level is < 20 Lux

20 Lux = 5000 Ω

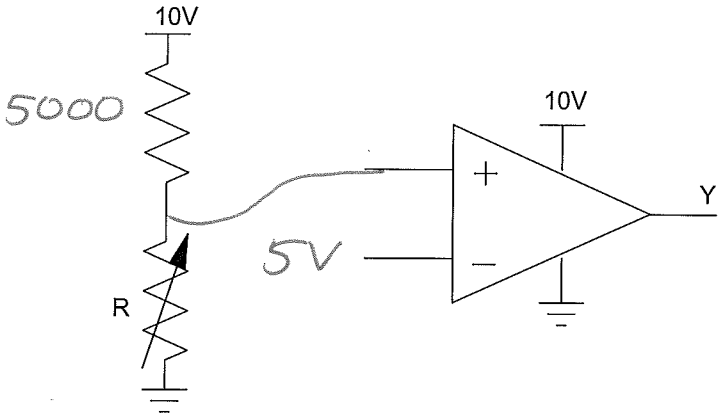

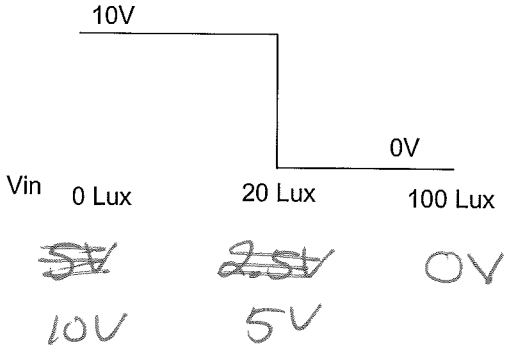

1) A light sensor has the following light / resistance relationship.

$$R = \frac{100{,}000}{Lux}\ \Omega$$

Design a Schmitt Trigger so that the output is

- Y = 0V when the light level is > ~~20~~ 30 Lux
- Y = 10V when the light level is < ~~30~~ 20 Lux

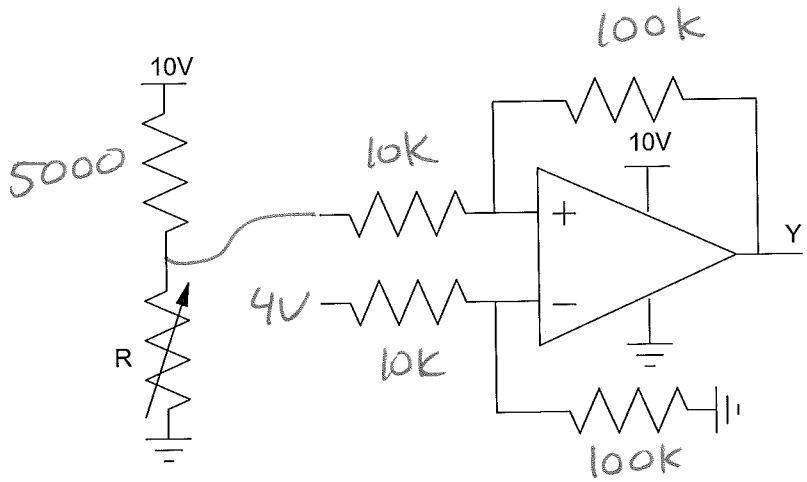

when $V_o = 0$

Switch at 4V

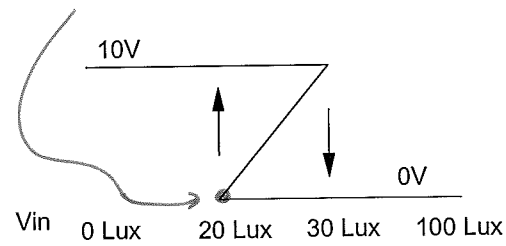

5000 Ω 3333 Ω

~~2.5~~

5V 4V

$$\text{gain} = \frac{10V - 0V}{5V - 4V} = 10$$

3) Given the following Karnough map, determine Y = f(A,B,C,D).

Y = $\overline{B} + CD + \overline{C}\,\overline{D}$

Y(A,B,C,D)

AB \ CD	00	01	11	10
00	1	1	1	1
01	1	0	1	0
11	x	x	x	x
10	1	1	x	x

$$y = \overline{C}\,\overline{D} + CD + \overline{B}$$

4) For the followint DTL AND gate, determine the voltages V1 .. V4. Assume ideal silicon diodes and transistor with

- Vf = 0.7V
- β= 100
- Vce(sat) = 0.2V

V1	V2	V3	V4
.7	5	1.4	0.2

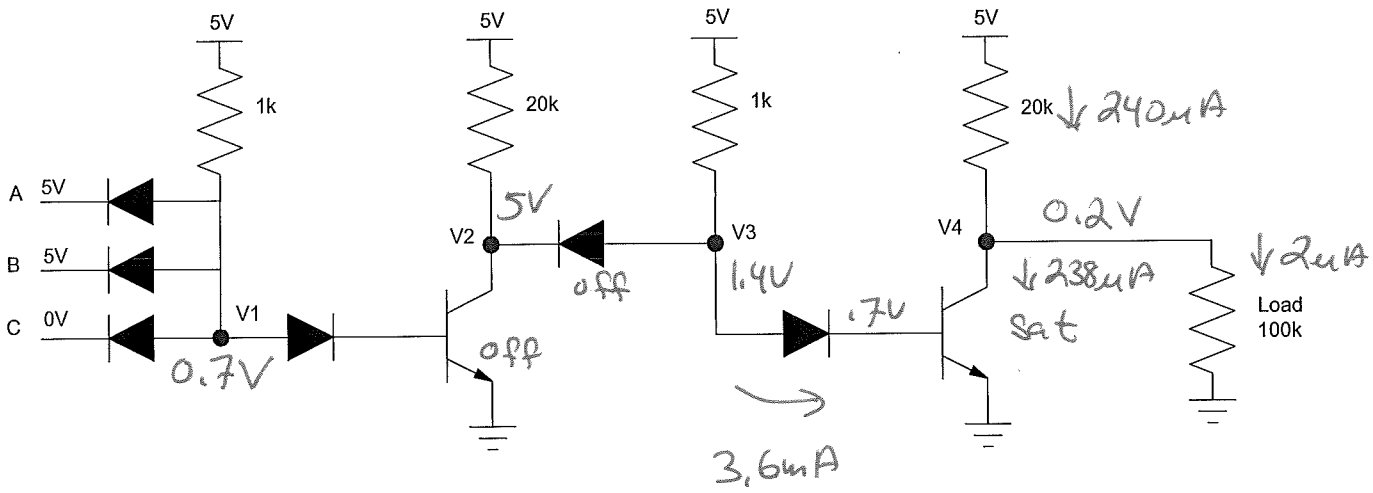

$\beta I_b > I_c$

$360uA > 238uA$

Saturated

5) For the following DTL OR gate, determine the voltages and currents. Assume ideal silicon diodes and transistor with

- Vf = 0.7V
- β= 100
- Vce(sat) = 0.2V

I1	I2	V3	V4
0	195μA	5.3V	0.2V

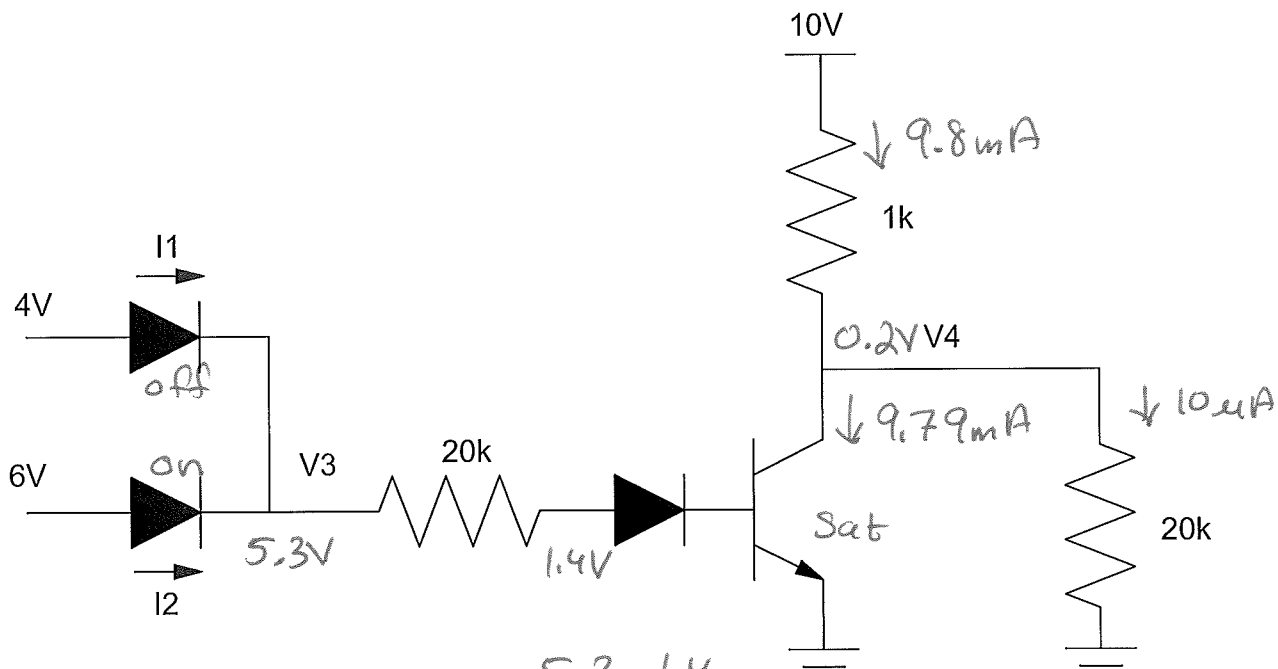

$$I_2 = \frac{5.3 - 1.4}{20k}$$

$$= 195\mu A$$

check

$\beta I_b > I_c$

$19.5mA > 9.79mA$

yes - saturated

Bonus! The United States uses 1 trillion kWh of electricity in 2015. According to the National Renewable Energy Lab, what percentage of that energy could North Dakota produce with wind energy?

25%