ECE 320 - Solution to Homework #1

EE 206 Review, Phasors. Due Monday, August 28th, 2017

Current Loops:

1a) Write the current loop equations for the following circuit

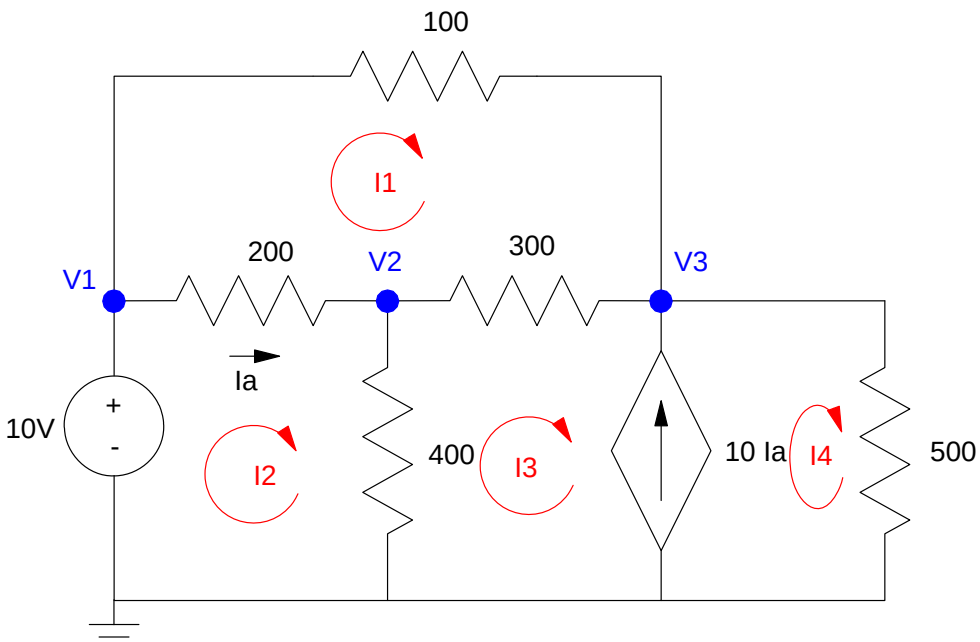

Start with the current sources

$$I_4 - I_3 = 10I_a = 10(I_2 - I_1)$$

Add three more equations. Avoid the current source since the voltage is unknown

$$100I_1 + 300(I_1 - I_3) + 200(I_1 - I_2) = 0$$

$$-10 + 200(I_2 - I_1) + 400(I_2 - I_3) = 0$$

$$-10 + 100I_1 + 500I_4 = 0$$

1b) Solve using Matlab (or similar program)

Group terms

$$10I_1 - 10I_2 - I_3 + I_4 = 0$$

$$600I_1 - 200I_2 - 300I_3 = 0$$

$$-200I_1 + 600I_2 - 400I_3 = 10$$

$$100I_1 + 500I_4 = 10$$

Place in matrix form

$$\begin{bmatrix} 10 & -10 & -1 & 1 \\ 600 & -200 & -300 & 0 \\ -200 & 600 & -400 & 0 \\ 100 & 0 & 0 & 500 \end{bmatrix} \begin{bmatrix} I_1 \\ I_2 \\ I_3 \\ I_4 \end{bmatrix} = \begin{bmatrix} 0 \\ 0 \\ 10 \\ 10 \end{bmatrix}$$

Solve in Matlab

```
>> A = [10,-10,-1,1 ; 600,-200,-300,0 ; -200, 600, -400, 0 ; 100 0 0 500]

  10   -10    -1     1
 600  -200  -300     0
-200   600  -400     0
 100     0     0   500

>> B = [0 ; 0 ; 10 ; 10 ]

   0
   0
  10
  10

>> I = inv(A)*B

 -0.0295
 -0.0225
 -0.0440
  0.0259
```

1c) Check your answers in PartSim (or similar circuit simulator)

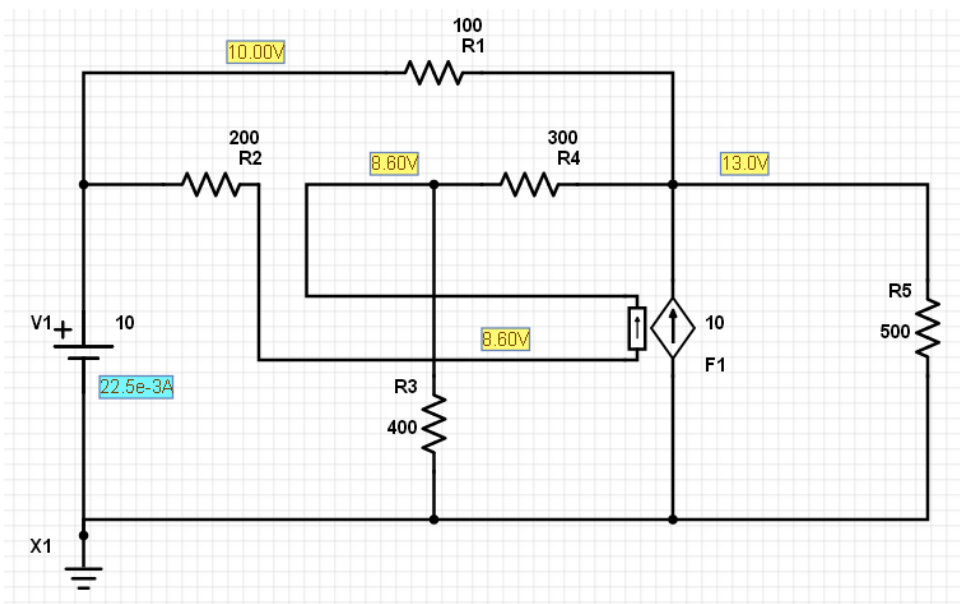

Check:

$$I_1 = \left(\frac{10V - 13V}{100\Omega}\right) = -0.03A$$

$$I_2 = -22.5mA$$

$$I_4 = \frac{13V}{500\Omega} = 26mA$$

Voltage Nodes:

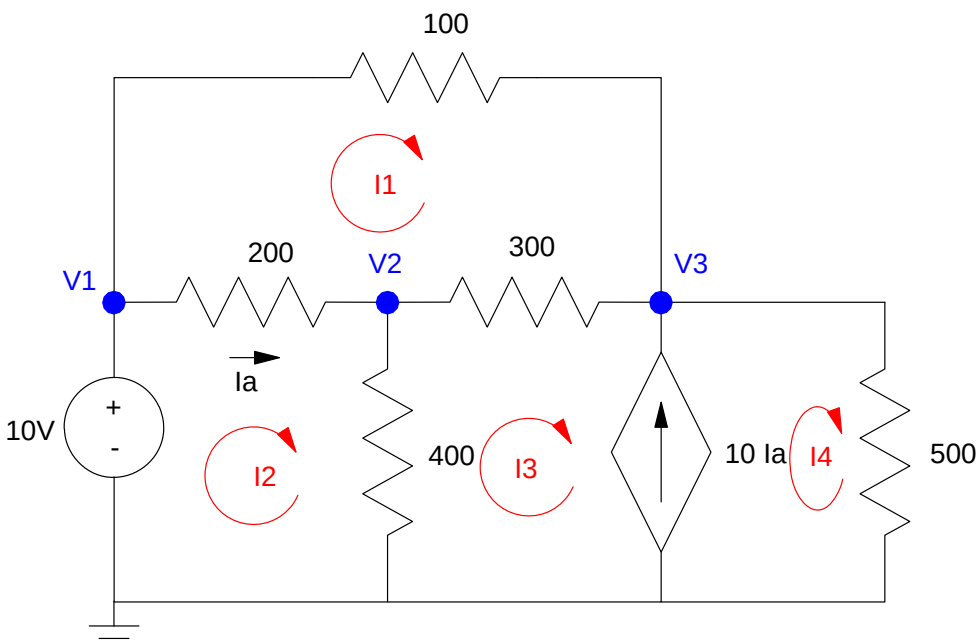

2a) Write the voltage node equations for the following circuit

Sum the current from each node to zero:

$$V_1 = 10$$

$$\left(\frac{V_2 - V_1}{200}\right) + \left(\frac{V_2}{400}\right) + \left(\frac{V_2 - V_3}{300}\right) = 0$$

$$\left(\frac{V_3 - V_1}{100}\right) + \left(\frac{V_3 - V_2}{300}\right) + \left(\frac{V_3}{500}\right) - 10\left(\frac{V_1 - V_2}{200}\right) = 0$$

2b) Solve using Matlab (or similar program)

Group terms.

$$V_1 = 10$$

$$\left(\frac{-1}{200}\right)V_1 + \left(\frac{1}{200} + \frac{1}{400} + \frac{1}{300}\right)V_2 + \left(\frac{-1}{300}\right)V_3 = 0$$

$$\left(\frac{-1}{100} + \frac{-10}{200}\right)V_1 + \left(\frac{-1}{300} + \frac{10}{200}\right)V_2 + \left(\frac{1}{100} + \frac{1}{300} + \frac{1}{500}\right)V_3 = 0$$

Place in matrix form.

$$\begin{bmatrix} 1 & 0 & 0 \\ \left(\frac{-1}{200}\right) & \left(\frac{1}{200} + \frac{1}{400} + \frac{1}{300}\right) & \left(\frac{-1}{300}\right) \\ \left(\frac{-1}{100} + \frac{-10}{200}\right) & \left(\frac{-1}{300} + \frac{10}{200}\right) & \left(\frac{1}{100} + \frac{1}{300} + \frac{1}{500}\right) \end{bmatrix} \begin{bmatrix} V_1 \\ V_2 \\ V_3 \end{bmatrix} = \begin{bmatrix} 10 \\ 0 \\ 0 \end{bmatrix}$$

Solve in matlab

```
>> A = [1,0,0 ;
        -1/200, 1/200+1/400+1/300, -1/300 ;
        -1/100-10/200, -1/300+10/200, 1/100+1/300+1/500]

    1.0000         0         0
   -0.0050    0.0108   -0.0033
   -0.0600    0.0467    0.0153

>> B = [10;0;0]

    10
     0
     0

>> V = inv(A)*B

   10.0000
    8.6010
   12.9534
```

2c) Check your answers in PartSim (or similar circuit simulator)

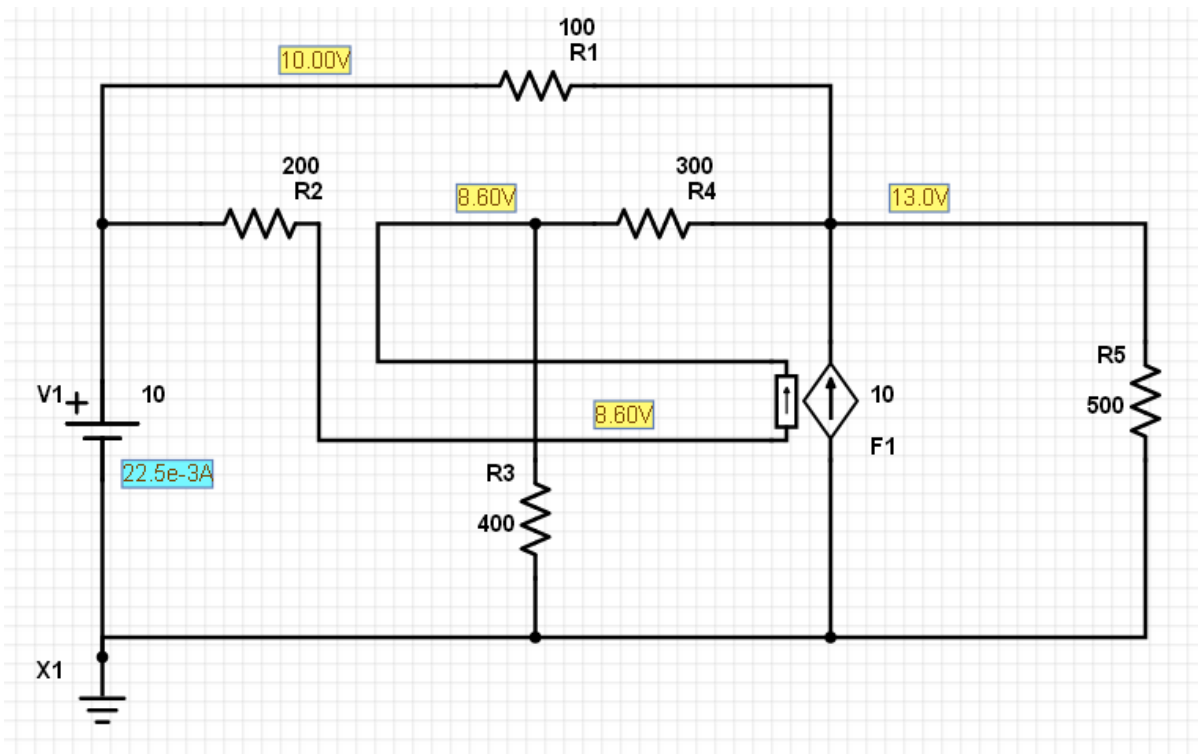

The voltages match

3) Assume Vin contains a DC and 60Hz signal:

$$V_{in} = 10 + 3\sin(377t)$$

3a) Determine the impedances of the inductor, capacitor, and resistor at DC and 377 rad/sec

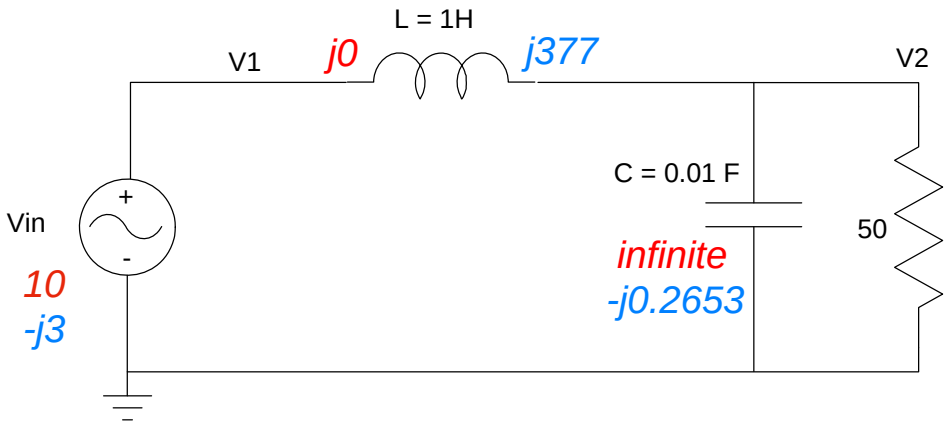

DC (w = 0) (shown in red)	AC (w = 377) (shown in blue)
Vin = 10 jwL = 0 1 / jwC = infinity	Vin = -j3 jwL = j377 1 / jwC = -j0.2653
The capacitor and resistor in parallel are: 50 || infinity = 50	The capacitor and resistor in parallel are: $\left(\frac{1}{50} + \frac{1}{-j0.2653}\right)^{-1} = 0.0014 - j0.2653$
By voltage division, V2 is $V_2 = \left(\frac{50}{50+j0}\right) \cdot 10$ $V_2 = 10$	By voltage division, V2 is $V_2 = \left(\frac{0.0014-j0.2653}{0.0014-j0.2653+j377}\right)(-j3)$ $V_2 = 0.0021\angle 90^0$ This is shorthand notation for V2(t) $V_2 = 0.0021\cos(377t + 90^0)$

To get the total answer, add the DC and AC terms together

$$\boxed{V_2 = 10 + 0.0021\cos(377t + 90^0)}$$

3c) Check your answer using PartSim (or similar program)

Input the circuit in PartSim. Set the input to

- No DC
- No AC
- Transient Source: 10V offset, 3V amplitude, 60Hz

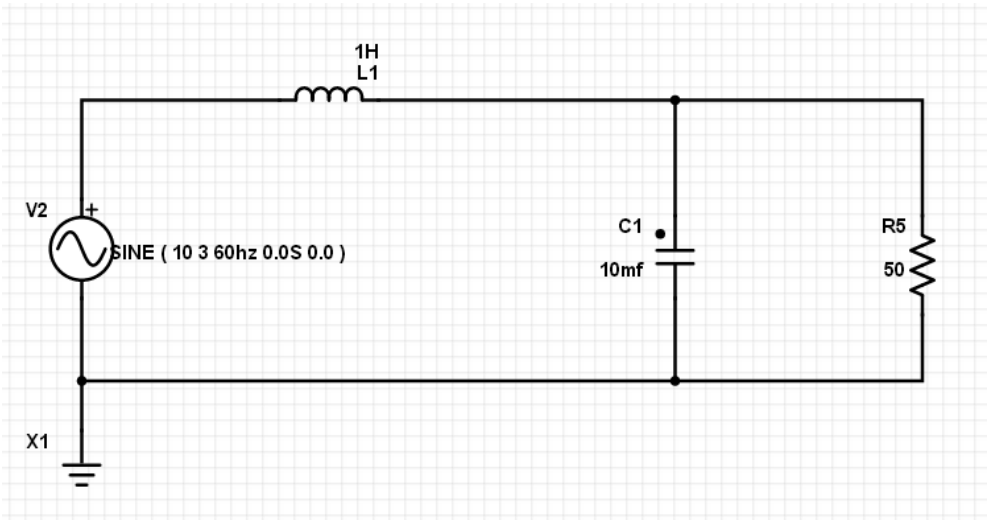

The ripple on V2 is very hard to see since its so small

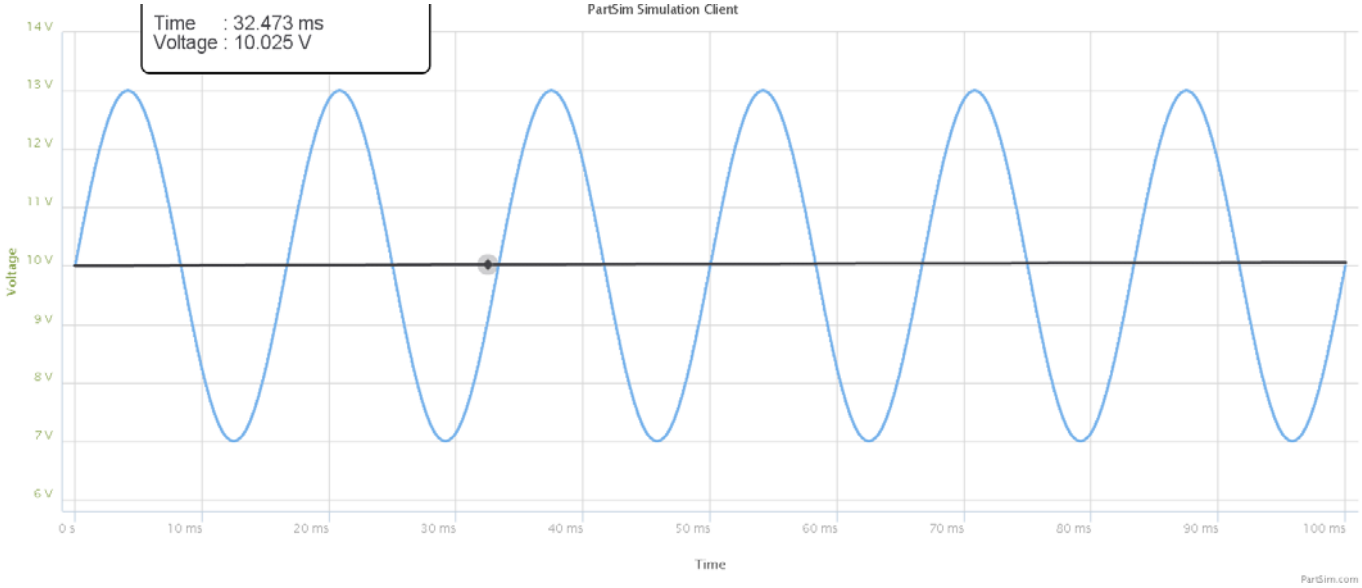

4) Assume Vin contains a DC and 1kHz signal:

$$V_{in} = 5 + 3\sin(6280t)$$

4a) Determine the impedances of the inductor, capacitor, and resistor at DC and 6280 rad/sec

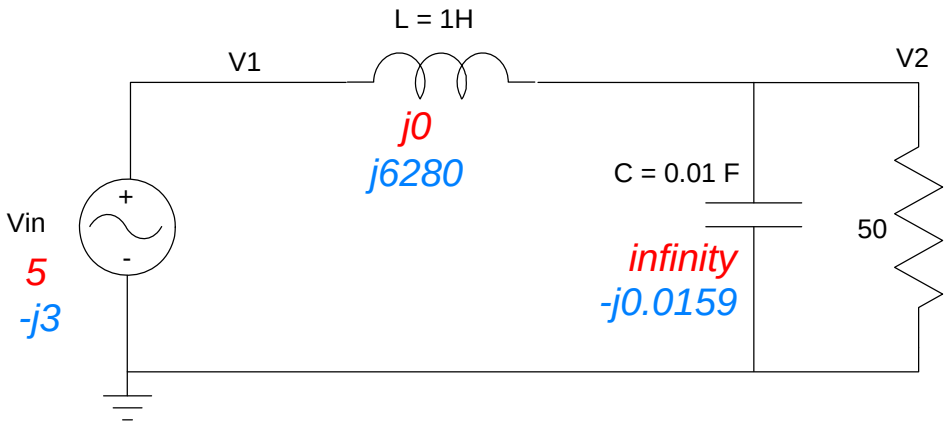

DC (w = 0) (shown in red)	AC (w = 6280) (shown in blue)
Vin = 5 jwL = 0 1 / jwC = infinity	Vin = -j3 jwL = j6280 1 / jwC = -j0.0159
The capacitor and resistor in parallel are: 50 || infinity = 50	The capacitor and resistor in parallel are: $\left(\frac{1}{50} + \frac{1}{-j0.0159}\right)^{-1} = 0 - j0.0159$
By voltage division, V2 is $V_2 = \left(\frac{50}{50+j0}\right) \cdot 5$ $V_2 = 5$	By voltage division, V2 is $V_2 = \left(\frac{0-j0.0159}{0-j0.0159+j6280}\right)(-j3)$ $V_2 = 0.0000076\angle 90^0$ This is shorthand notation for V2(t) $V_2 = 0.0000076\cos(6280t + 90^0)$

To get the total answer, add the DC and AC terms together

$$\boxed{V_2 = 5 + 0.0000076\cos(6280t + 90^0)}$$