ECE 320 - Quiz #2 - Name _____

LEDs, ideal diodes. September 12, 2018

1) Assume the characteristics for a diode are

$$V_d = 0.052 \cdot \ln\left(\frac{I_d}{10^{-8}} + 1\right) \qquad I_d = 10^{-8}\left(\exp\left(\frac{V_d}{0.052}\right) - 1\right)$$

Write N equations to solve for the unknown voltages for the following circuit.

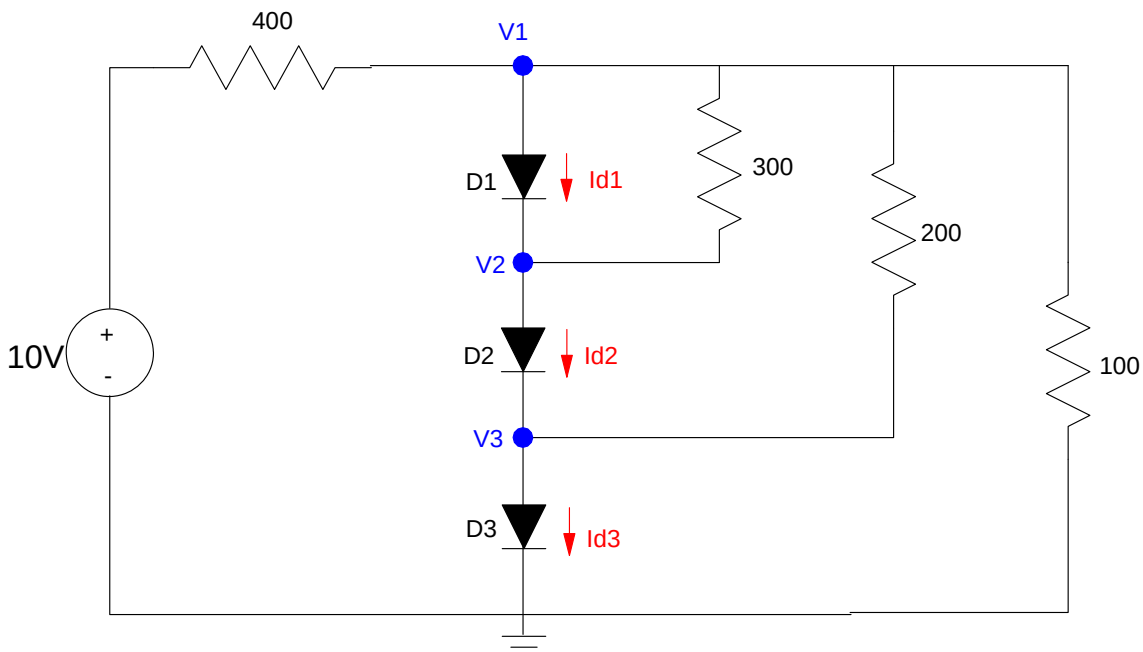

2) The VI characteristics for the diode are shown on the following graph. Draw the load-line for the following circuit and determine the voltage and current through the diode.

Load Line	Vd	Id
show on graph		

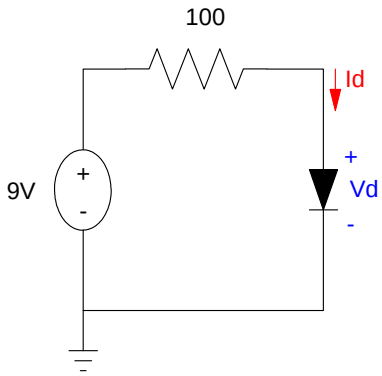

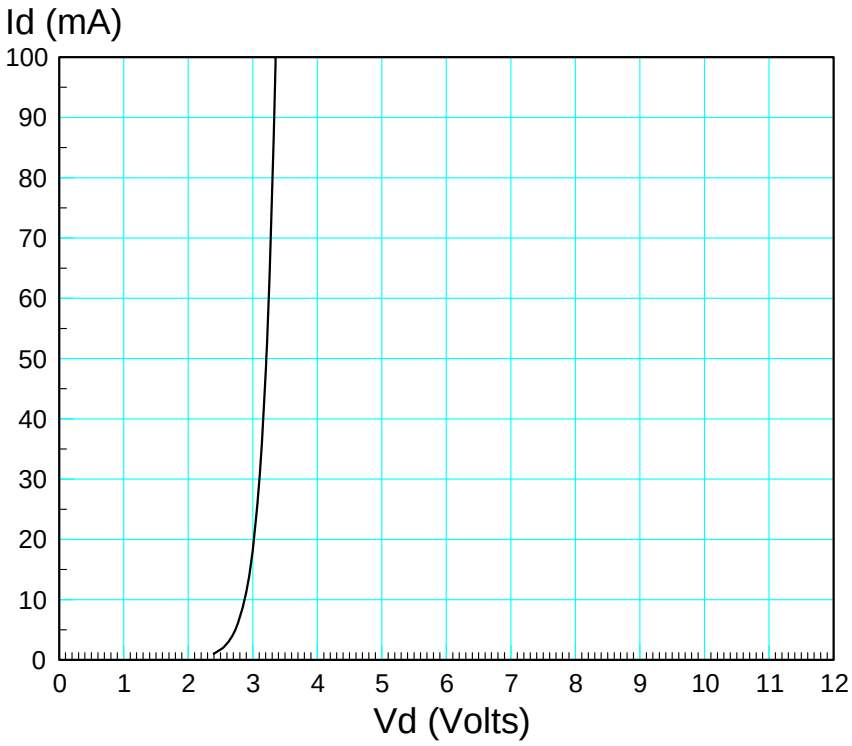

3) Assume ideal silicon diodes (Vf = 0.7V). Determine the voltages and currents for the following circuit

V1	V2	V3	Id1	Id2	Id3

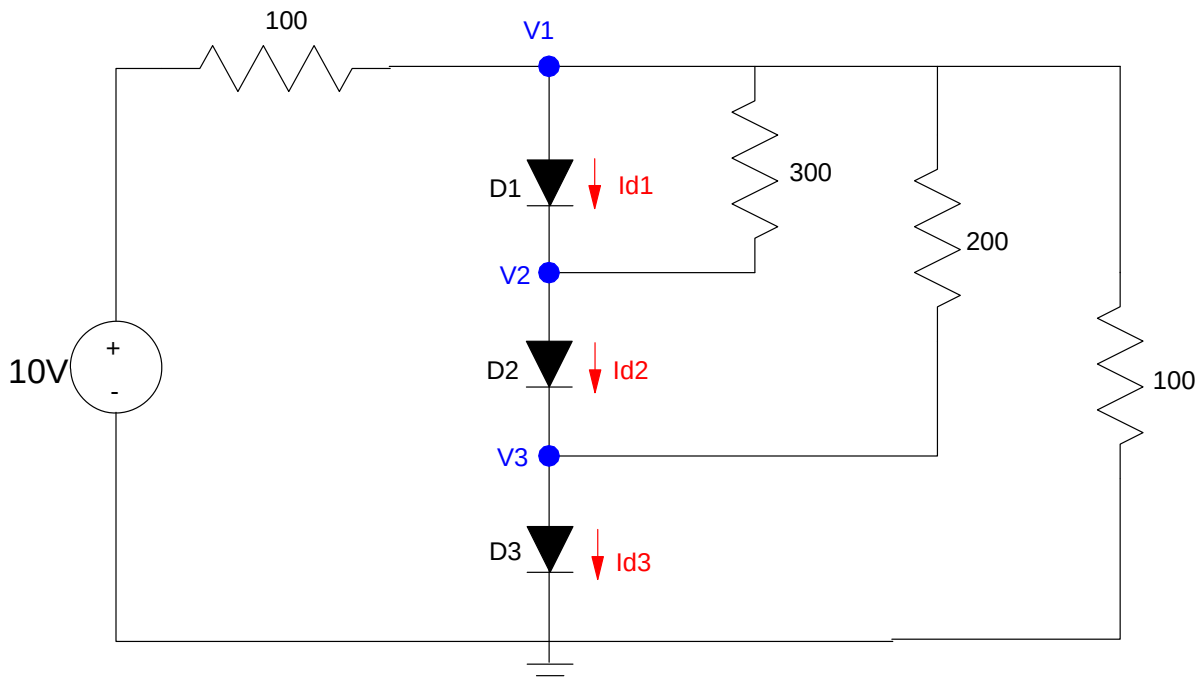

4) Assume ideal silicon diodes (Vf = 0.7V). Determine the voltages and currents for the following circuit.

V1	V2	V3	Id1	Id2	Id3

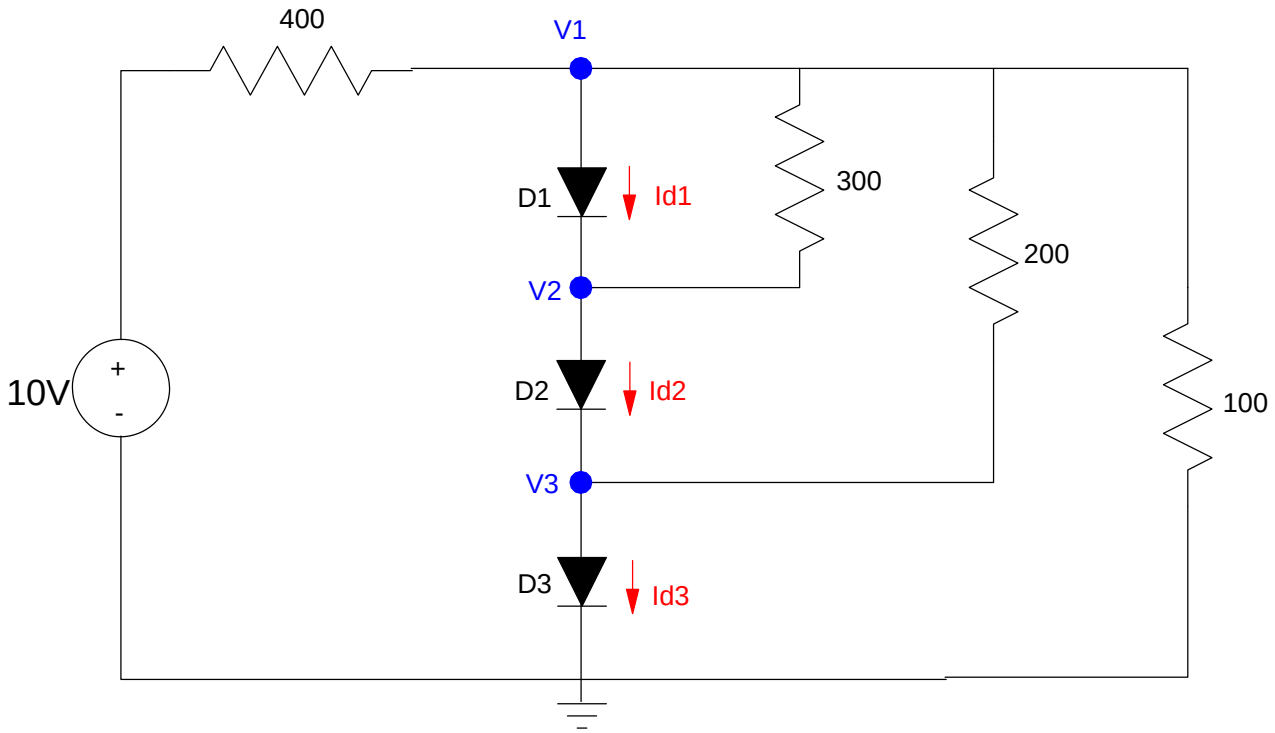

5) The specifications for a RGB LED are:

Color	Vf @ 20mA	mcd @ 20mA
red	2.0V	10,000
green	3.2V	10,000
blue	3.2V	10,000

Determine the resistors so that the LED outputs aqua blue light:

- Red = 4000 mcd
- Green = 3000 mcd
- Blue = 10,000 mcd

R(red)	R(green)	R(blue)

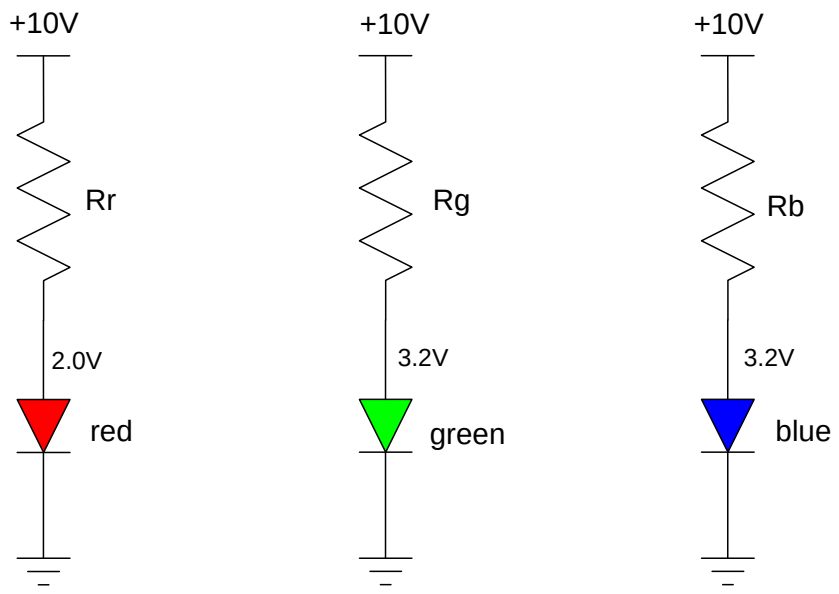

Bonus! Insurance is shared risk. For some things, insurance works well. For others, it does not.

Does insurance work with health care? Explain why or why not.