ECE 320 - Quiz #1 - Name _____

ECE 206 Review. August 30, 2018

1) Give N current loop equations to allow you to solve for the N unknown currents in this circuit

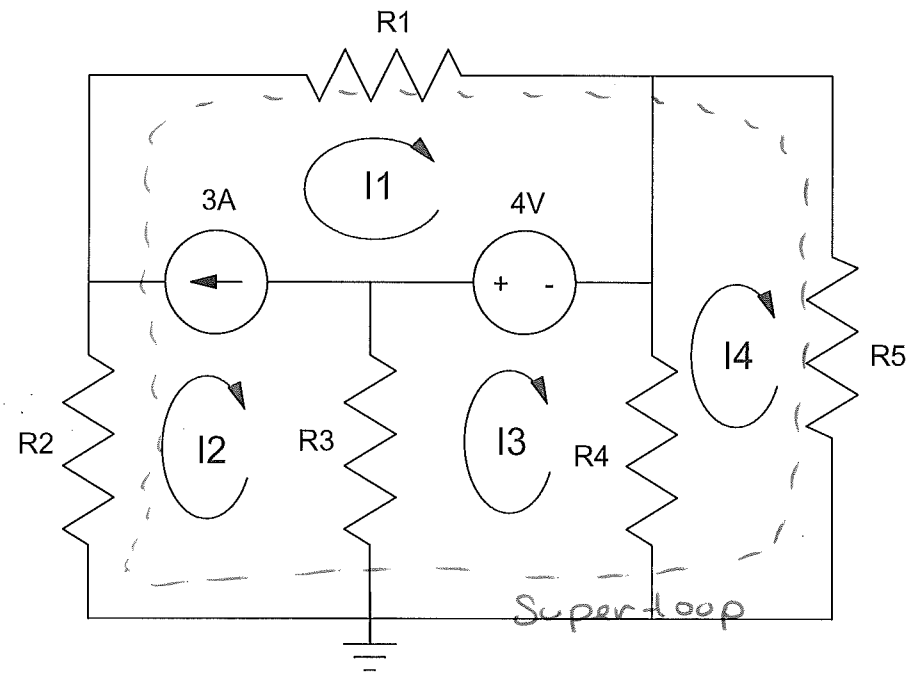

$I_1 - I_2 = 3$
$R_3(I_3 - I_2) + 4 + R_4(I_3 - I_4) = 0$
$R_4(I_4 - I_3) + R_5(I_4) = 0$
$I_2 R_2 + I_1 R_1 + I_4 R_5 = 0$

note| If you need to use a calculator, download a complex # calculator to your cell phone

Free42 android

Cmpxrpn apple

2) Give N voltage node equations to allow you to solve for the N unknown voltages in this circuit

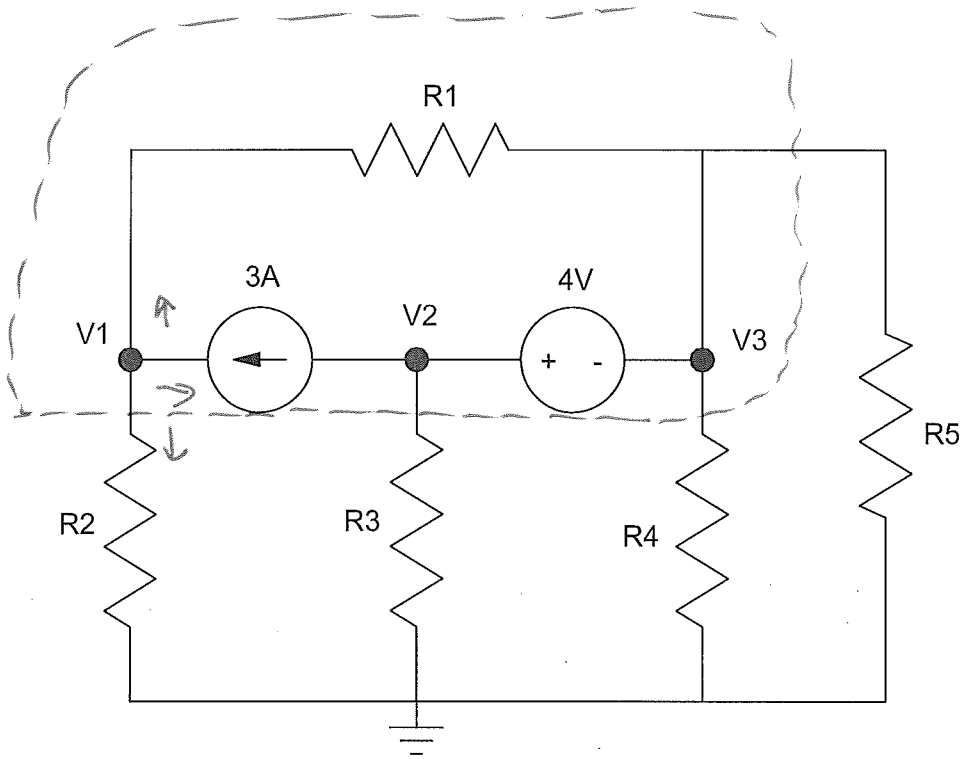

$V_2 - V_3 = 4$
$\frac{V_1}{R_2} - 3 + \frac{V_1 - V_3}{R_1} = 0$
$\frac{V_1}{R_2} + \frac{V_2}{R_3} + \frac{V_3}{R_4} + \frac{V_3}{R_5} = 0$

3) Find the voltage at Y

Y = 6.4516 V

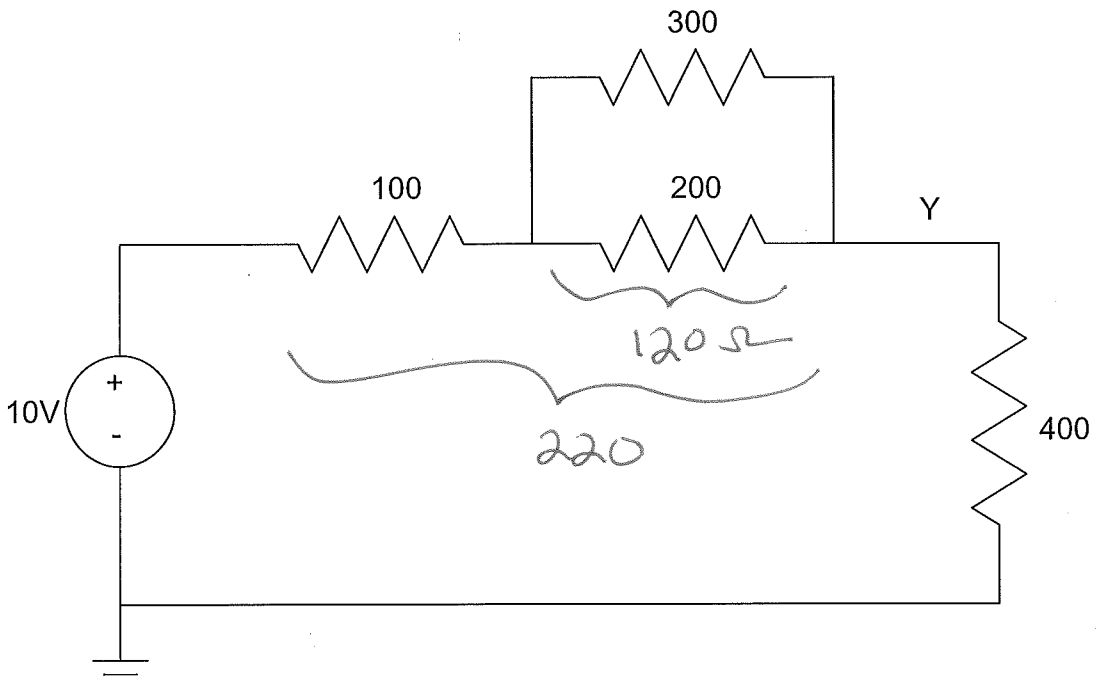

$$Y = \left(\frac{400}{400 + 220}\right) 10$$

$$Y = 6.4516\,V$$

4) Find the voltage at Y

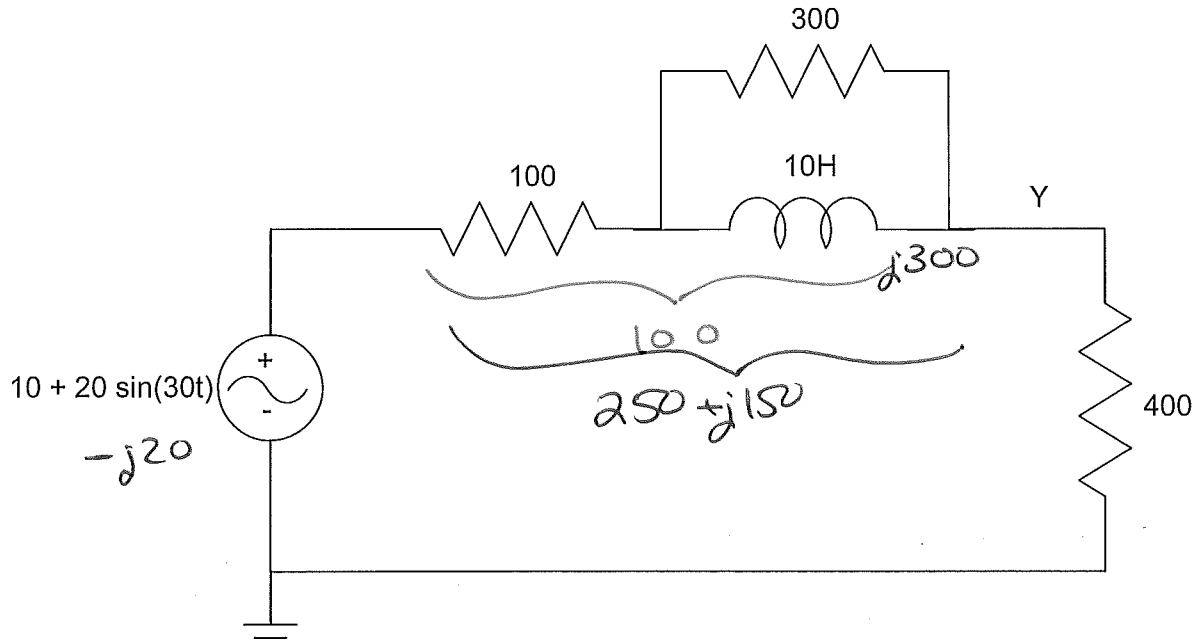

DC

$L \to 0$

$$Y = \left(\frac{400}{400+100}\right) 10$$

$Y = 8$

AC

$s = j30$

$L \to j300$

$j300 \| 300 = 150 + j150$

$R = 100 + 150 + j150$

$$Y = \left(\frac{400}{400 + 250 + j150}\right)(0 - j20)$$

$Y = -2.69 - j11.68$

$y(t) = -2.69\cos(30t) + 11.68\sin(30t)$

$$\boxed{y = 8 - 2.69\cos(30t) + 11.68\sin(30t)}$$

5) Find the voltage at Y

easier with a calculator. Free42 (android) RPN Complex (apple)

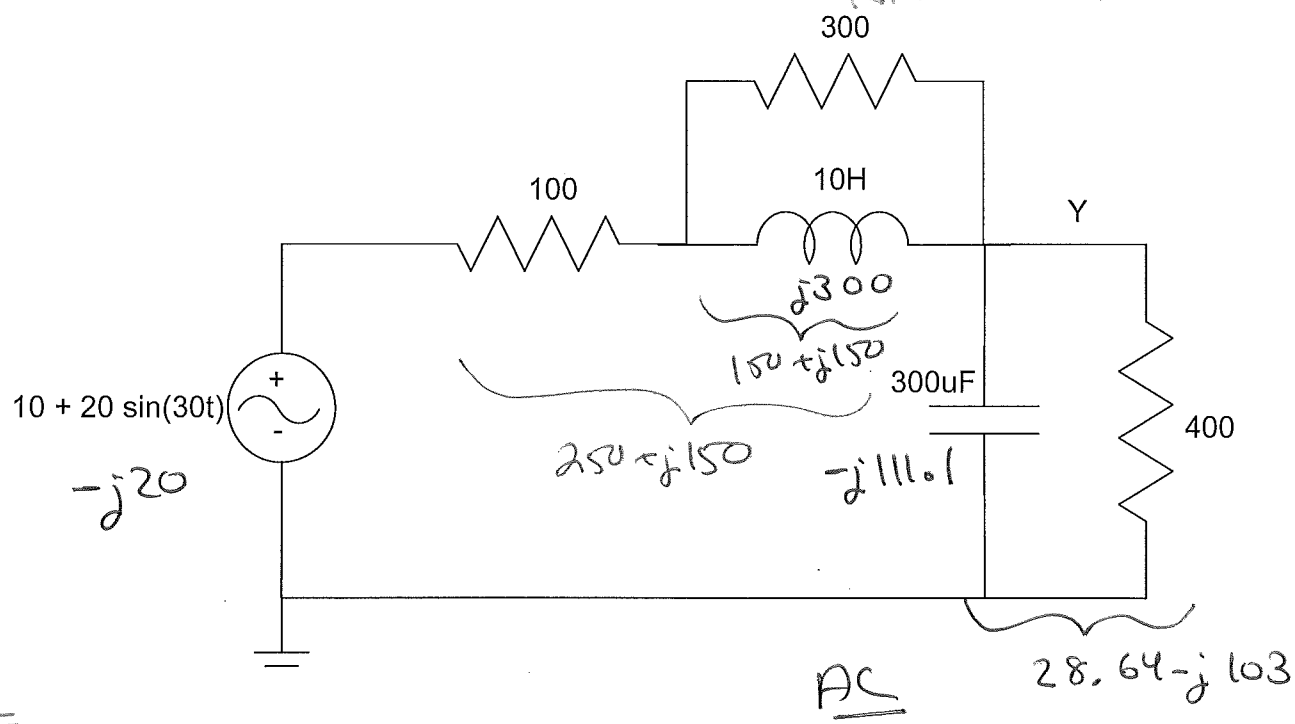

DC

$L \to 0$

$C \to \infty$

$Y = \left(\frac{400}{400+100}\right)10$

$Y = 8$

AC

$L \to j300$

$C \to -j111.1$

$400 \parallel j111.1 = 28.64 - j103$

$300 \parallel j300 = 150 + j150$

$$y = \left(\frac{(28.64 - j103)}{(28.64 - j103) + (250 + j150)}\right) \cdot (-j20)$$

$$y = -7.54 - j0.78$$

Bernie Sanders Bonus! What is insurance?

$$y(t) = 8 - 7.54\cos(30t) + 0.78\sin(30t)$$

-7.52 $\quad$ $.78$

Insurance is shared risk.

ex) You live in a town of 10,000 people

Each year, one person's car is struck by lightning - costing $10,000 to repair.

a) No insurance: whoever loses their car comes up with the $10,000

b) Insurance: Everyone chips in $1. That money goes to whoever loses their car (shared risk)

Ideally: money in = money out

$$\text{premiums} = \frac{\text{money out}}{\text{\# members}}$$

A-E F-J K-O P-T U-Z