ECE 320 - Quiz #2 - Name _____

LEDs, ideal diodes. September 12, 2018

1) Assume the characteristics for a diode are

$$V_d = 0.052 \cdot \ln\left(\frac{I_d}{10^{-8}} + 1\right) \qquad I_d = 10^{-8}\left(\exp\left(\frac{V_d}{0.052}\right) - 1\right)$$

Write N equations to solve for the unknown voltages for the following circuit.

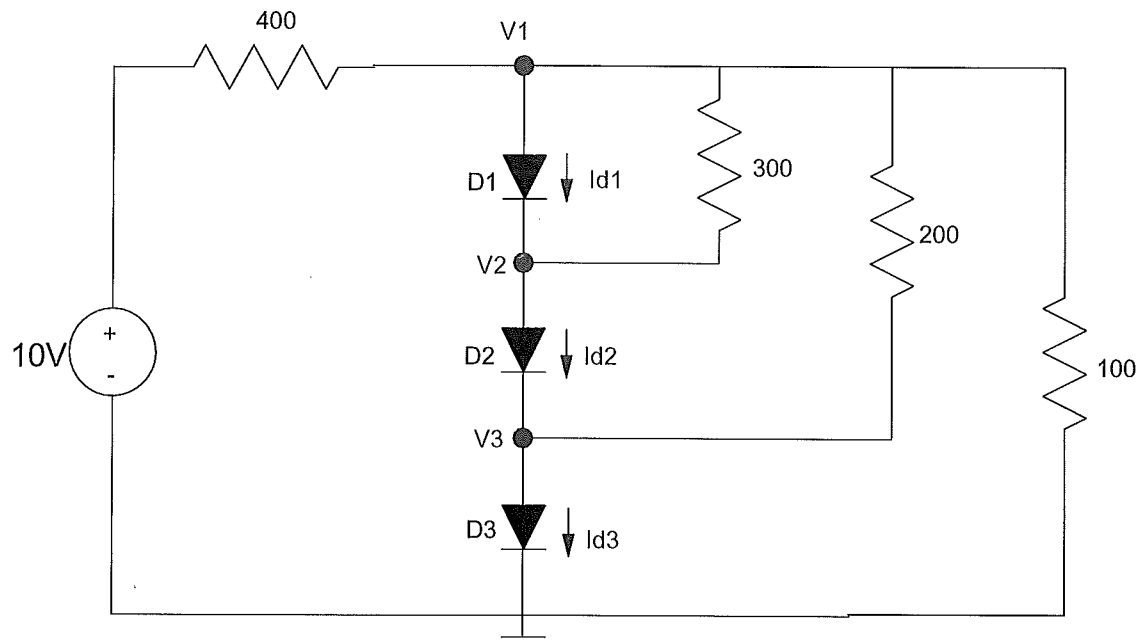

$I_{d1} = 10^{-8}\left(\exp\left(\frac{V_1 - V_2}{.052}\right) - 1\right)$
$I_{d2} = 10^{-8}\left(\exp\left(\frac{V_2 - V_3}{.052}\right) - 1\right)$
$I_{d3} = 10^{-8}\left(\exp\left(\frac{V_3}{.052}\right) - 1\right)$
$\frac{V_1 - 10}{400} + I_{d1} + \frac{V_1 - V_2}{300} + \frac{V_1 - V_3}{200} + \frac{V_1}{100} = 0$
$-I_{d1} + I_{d2} + \frac{V_2 - V_1}{300} = 0$
$-I_{d2} + I_{d3} + \frac{V_3 - V_1}{200} = 0$

2) The VI characteristics for the diode are shown on the following graph. Draw the load-line for the following circuit and determine the voltage and current through the diode.

Load Line	Vd	Id
show on graph	3.2V	58mA

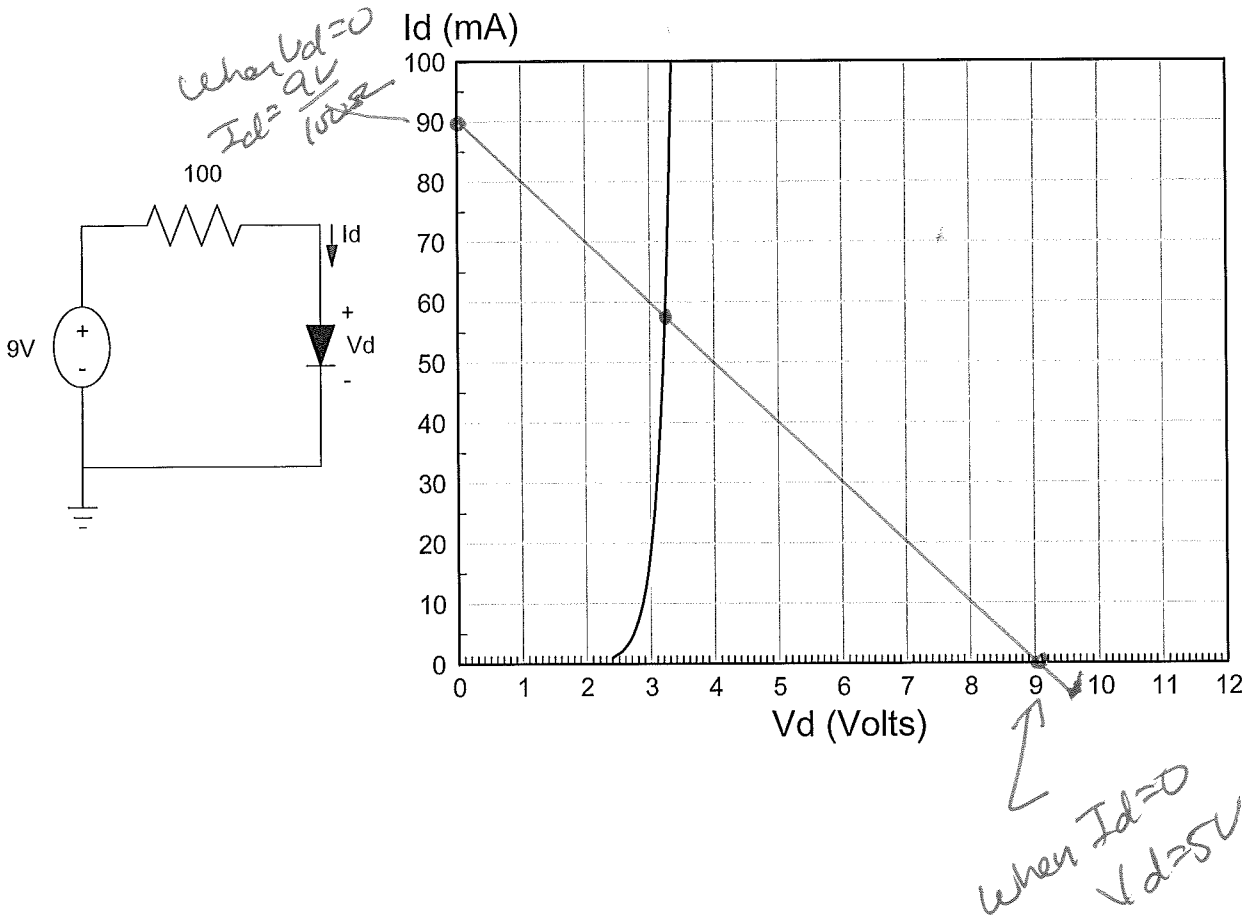

3) Assume ideal silicon diodes (Vf = 0.7V). Determine the voltages and currents for the following circuit

V1	V2	V3	Id1	Id2	Id3
2.1	1.4	0.7	48.67uA	51mA	58mA

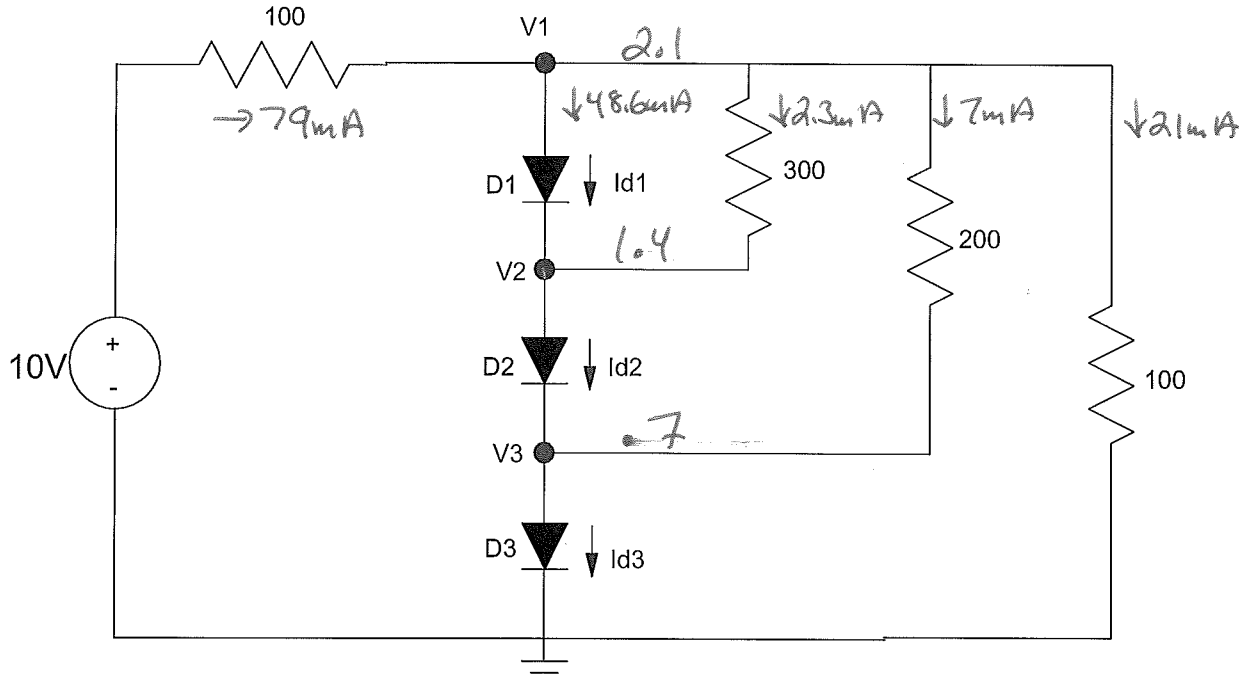

4) Assume ideal silicon diodes (Vf = 0.7V). Determine the voltages and currents for the following circuit.

V1	V2	V3	Id1	Id2	Id3
1.592V	1.4V	.7V	0	640uA	5.1mA

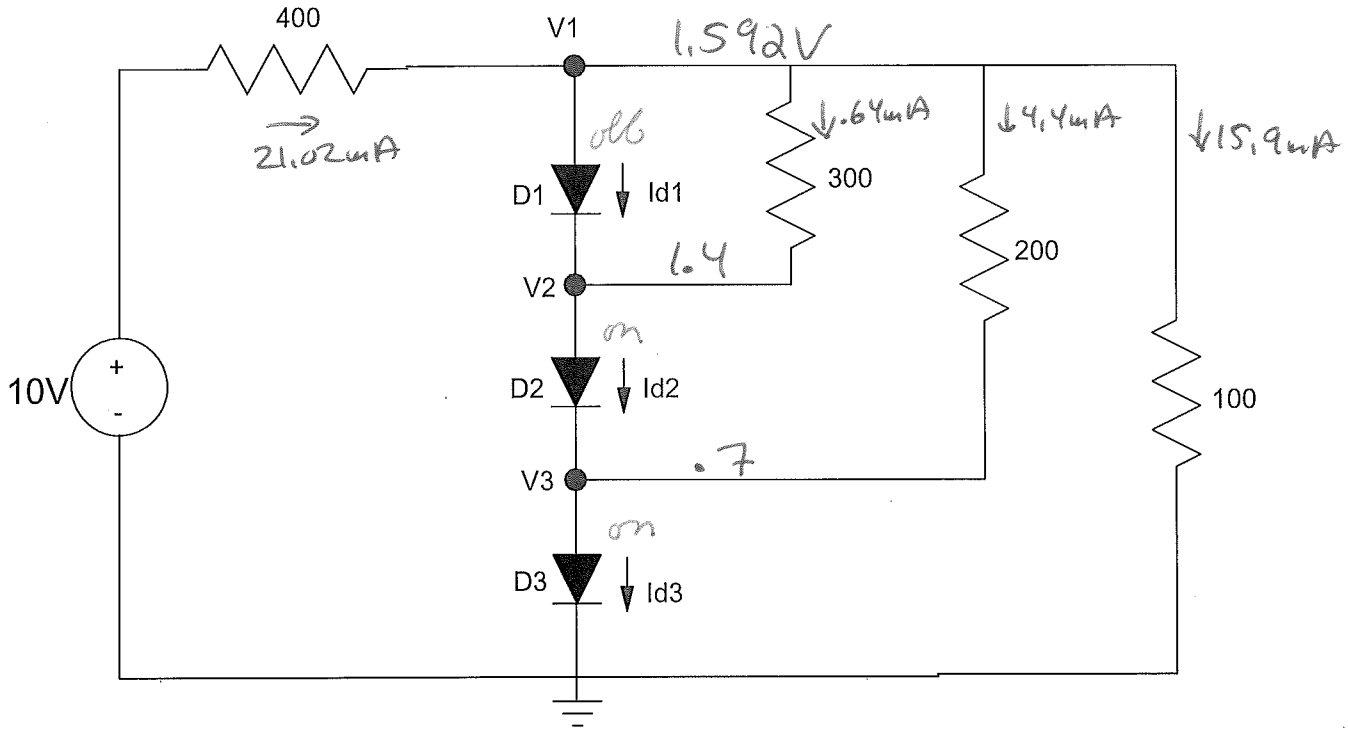

$$\frac{V_1-10}{400}+\frac{V_1-1.4}{300}+\frac{V_1-.7}{200}+\frac{V_1}{100}=0$$

$V_1 = 1.592V$

$$\frac{V_1-10}{400}+\frac{V_1-1.4}{300}+\frac{V_1-.7}{200}+\frac{V_1}{100}=0$$

$V_1 = 1.592V$

5) The specifications for a RGB LED are:

Color	Vf @ 20mA	mcd @ 20mA
red	2.0V	10,000
green	3.2V	10,000
blue	3.2V	10,000

Determine the resistors so that the LED outputs aqua blue light:

- Red = 4000 mcd 8mA
- Green = 3000 mcd 6mA
- Blue = 10,000 mcd 20mA

R(red)	R(green)	R(blue)
1000	1133	340

$\frac{10-2}{8mA} = 1000$ $\frac{10-3.2}{6mA} = 1133$ $\frac{10-3.2}{20mA} = 340$

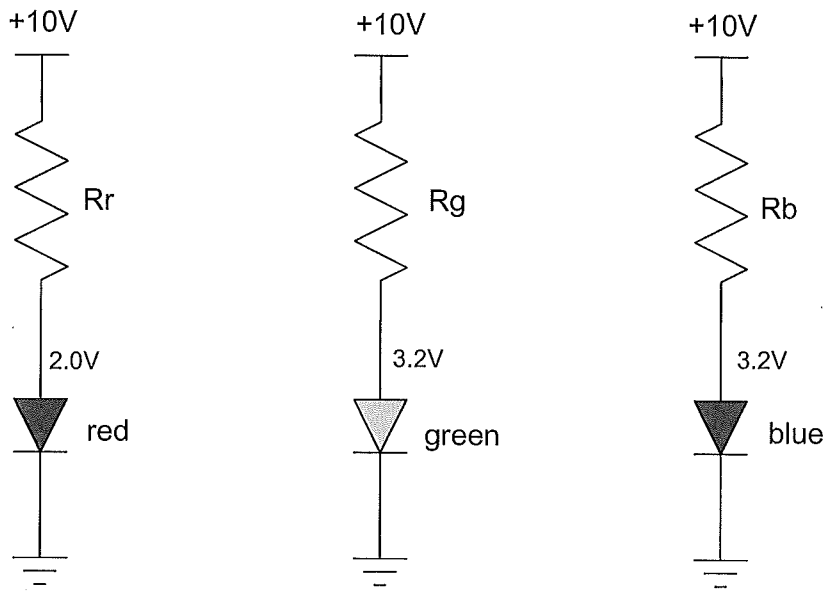

Bonus! Insurance is shared risk. For some things, insurance works well. For others, it does not.

Does insurance work with health care? Explain why or why not.

yes : 22 no : 15 no & ans : 11

~~LHT~~ ~~LHT~~ ~~LHT~~ ~~LHT~~ II

~~LHT~~ ~~LHT~~ ~~LHT~~

~~LHT~~ ~~LHT~~ I