ECE 320 - Quiz #3 - Name _____

AC to DC Converters, Max/Min, Clippers. September 20, 2018

1) Determine the DC and AC voltages for V1 and V2. Assume ideal silicon diodes (Vf = 0.7V)

V1		V2	
DC (max of V1)	AC (V1pp)	DC (mean)	AC (V2pp)
9.3V	.6458Vpp	7.48V	.0893Vpp

DC = 8.97V

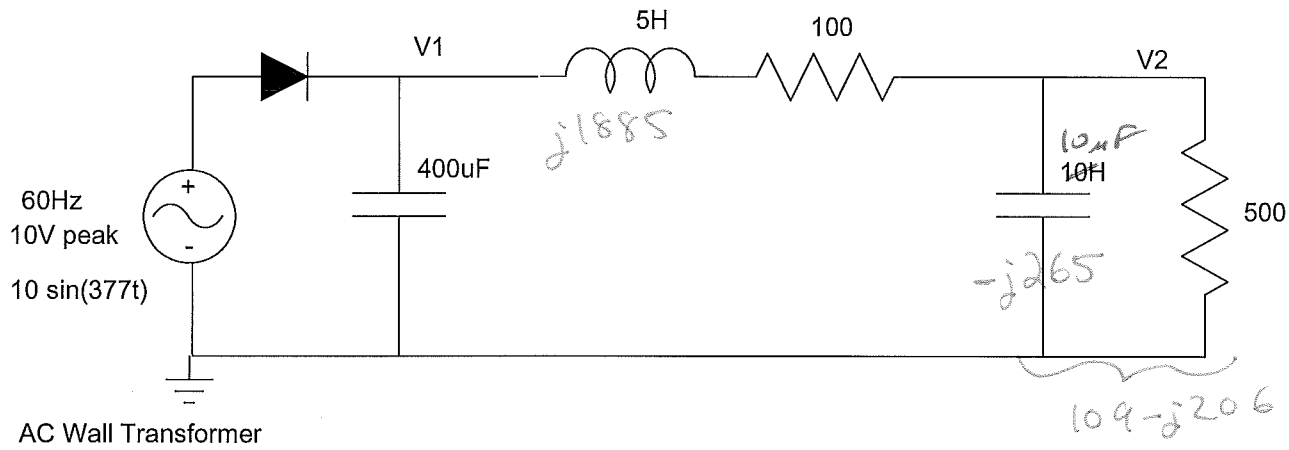

$I = 9.3V / 600\Omega = 15.5mA$

(a little high - should use $V_1(DC)$)

$I = C \frac{dV}{dt}$

$15.5mA = 400uF \cdot \frac{dV}{1/60}$

$dV = .6458V$

$V_1(DC) = 9.3V - \frac{1}{2}(.6458V)$

$V_1(DC) = 8.97V$

$V_2(DC) = \left(\frac{500}{500+100}\right) 8.97$

$V_2(DC) = 7.48V$

$V_2(AC) = \left(\frac{(109-j206)}{(109-j206)+(100+j1885)}\right) \cdot 0.6458$

$V_2(AC) = .0893 V_{pp}$

$V_2(AC) = \left(\frac{(109-j206)}{(109-j206)+(100+j1885)}\right) \cdot 0.6458V_{pp}$

2) Find R, L, and C so that the following AC to DC covnerter has

- 20mA flowing to the load
- 2Vpp ripple at V1
- 500mVpp ripple at V2

Assume ideal silicon diodes (Vf = 0.7V)

C1	L	C2	R
167uF	3.34H	0	315 Ω

1.67H also works — 16uF

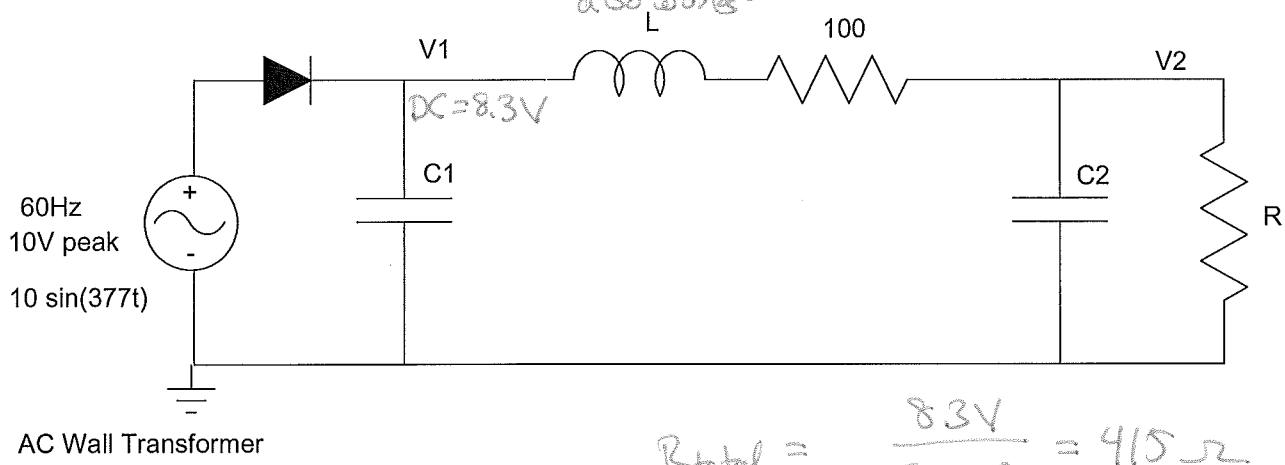

$R_{total} = \frac{8.3V}{20mA} = 415\,\Omega$

$R = 415 - 100 = 315\,\Omega$

$I = C_1 \frac{dV}{dt}$

$20mA = C_1 \cdot \frac{2V}{1/60s}$

$\boxed{C_1 = 167uF}$

Let $\omega L = 4R$

$\omega L = 1260$

$L = 3.34H$

$V_1(peak) = 9.3V$

$V_1(DC) = 9.3 - \frac{1}{2} \cdot 2V_{pp}$

$V_1(DC) = 8.3V$

3) Determine the currents for the following max/min circuit. Assume ideal silicon diodes (Vf = 0.7V)

I1	I2	I3	I4	I5	I6
0	6.9mA	.4mA	0	0	9.3mA

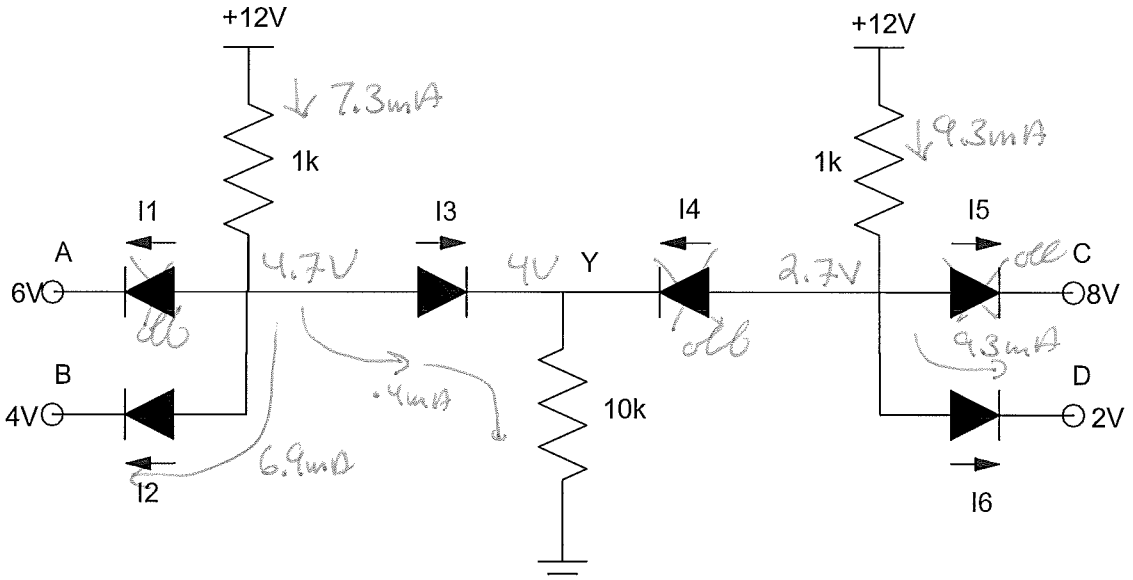

4) Design a clipper circuit to approximate the following function (tolerance 0.25 Volts)

R0	R1	Vz1	R2	Vz2
667	1137	5V	189	8.3V

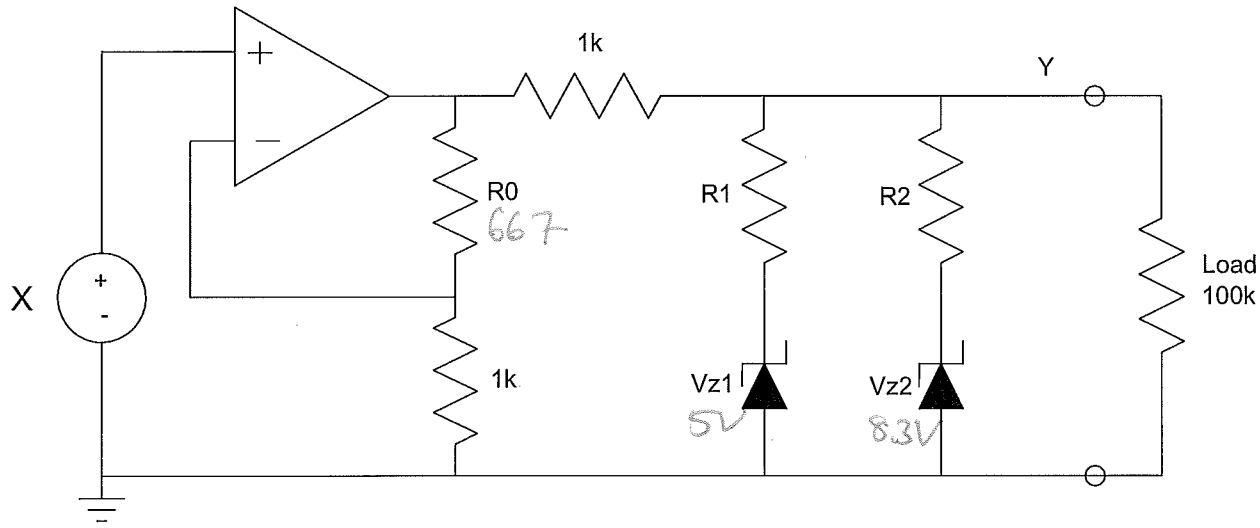

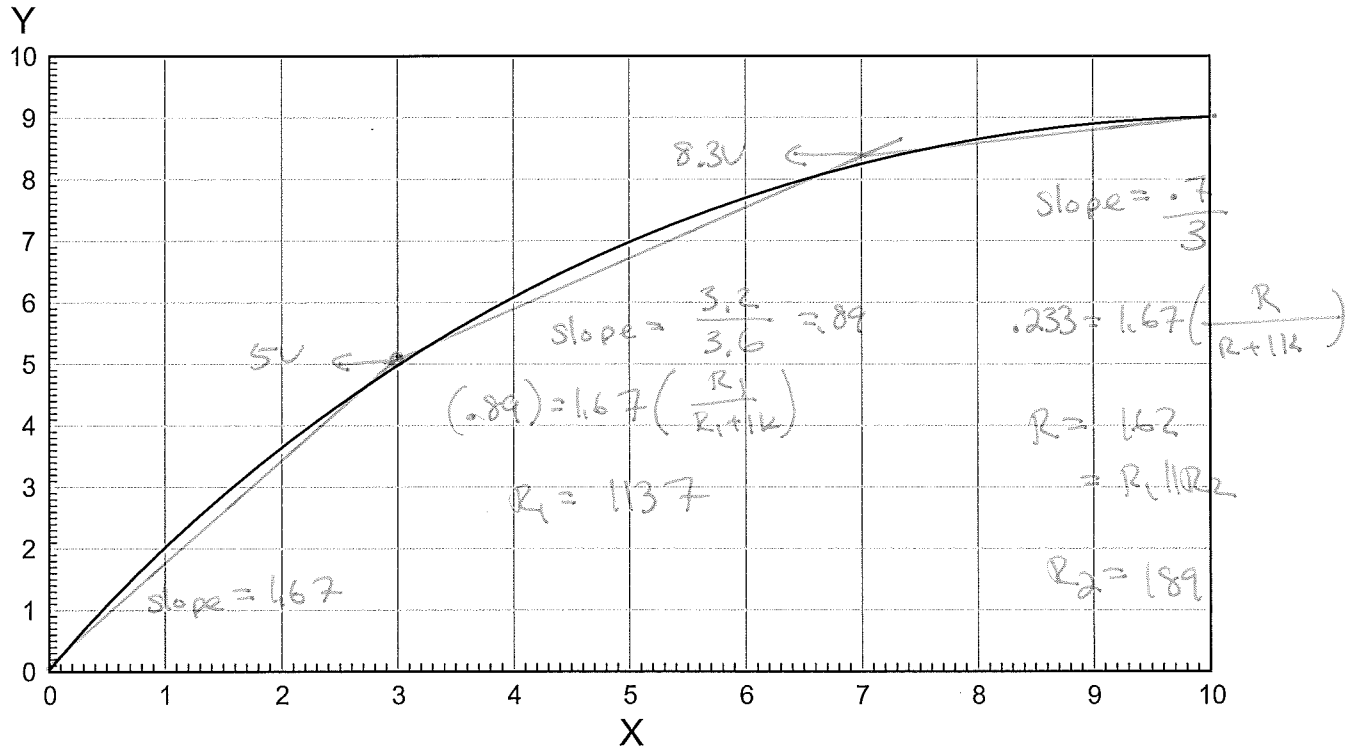

5) Design a clipper circuit to limit the output votlage to

$$V_{out} = \begin{cases} +5V & V_{in} > 5V \\ V_{in} & -4V < V_{in} < 5V \\ -4V & V_{in} < -4V \end{cases}$$

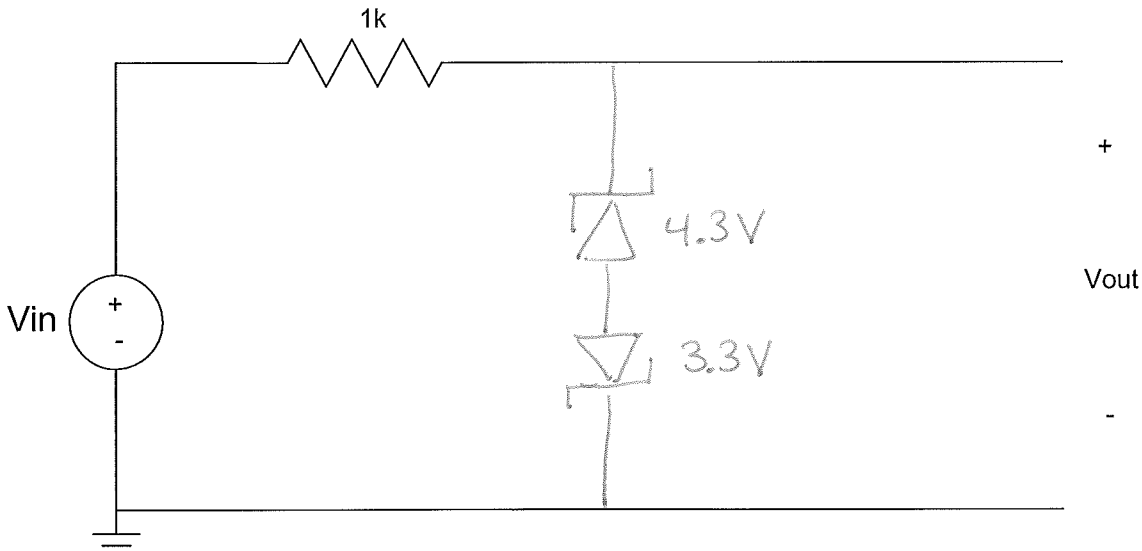

Bonus! Where do health care dollars go? The following people are the CEO's of five insurance companies. Within 10%, what was their average annual salary in 2017 (within 10%)?

- John R. Strangfeld, Prudential Insurance $19.1 million
- Mark T. Bertolini, Aetna $18.7 million
- Brian A. Kane, Humana $5.7 million
- David M. Cordani, Cigna $17.5 million
- Daniel P. Amos, AFLAC $16.3 million

avg = $15.5 million / year

your health care dollars at work...