ECE 320 - Quiz #4 - Name _____

Transistor Theory, Transistor Switch, H-Bridge. September 28, 2018

1) The VI characteristics for a transistor are shown below. From this

Label the Off - Active - Saturated Regions	What is the current gain, beta?
show on graph	200

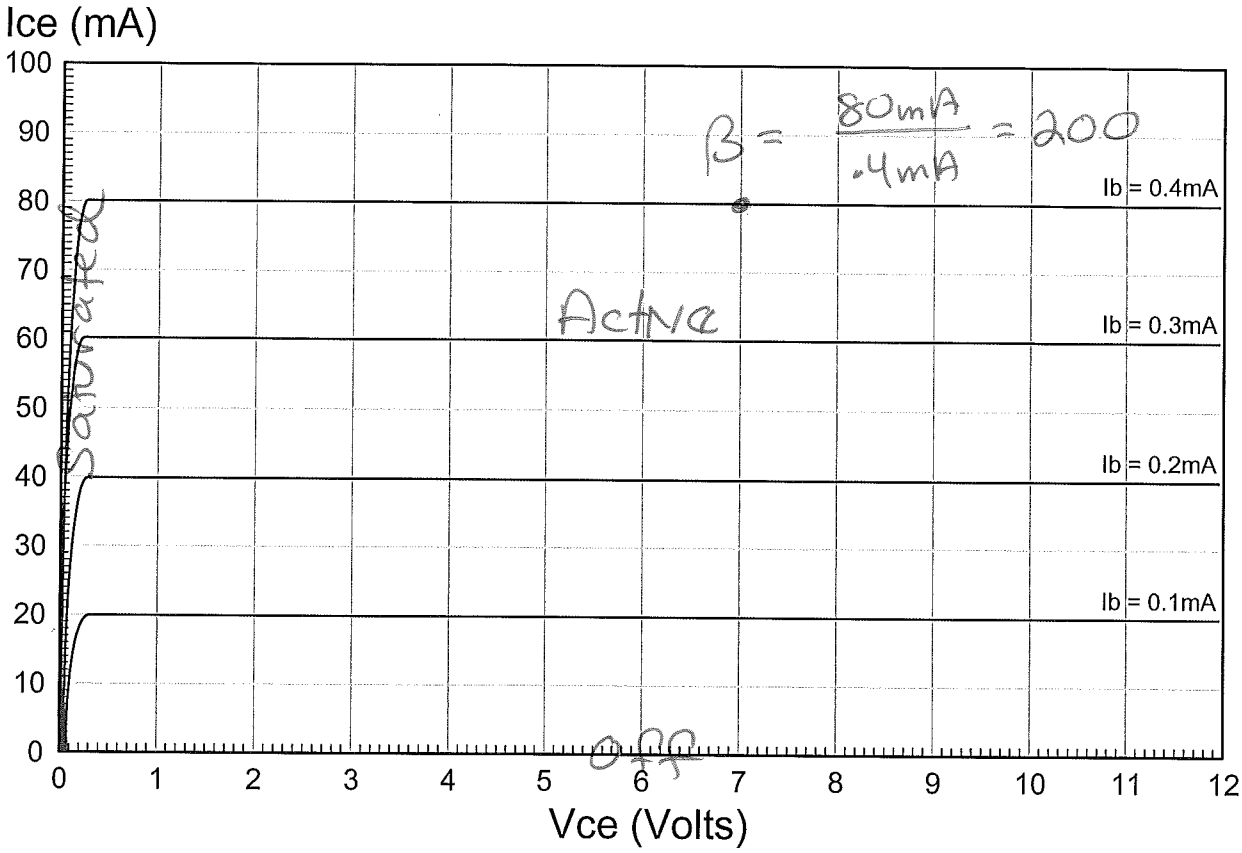

2) Draw the load line and determine the operating point for Vin = 0V, 5V, and 10V

Load Line	(Vce, Ic) for ...		
	Vin = 0V	Vin = 5V	Vin = 10V
on graph	(11V, 0mA)	(4V, 43mA)	(.2V, 72mA)

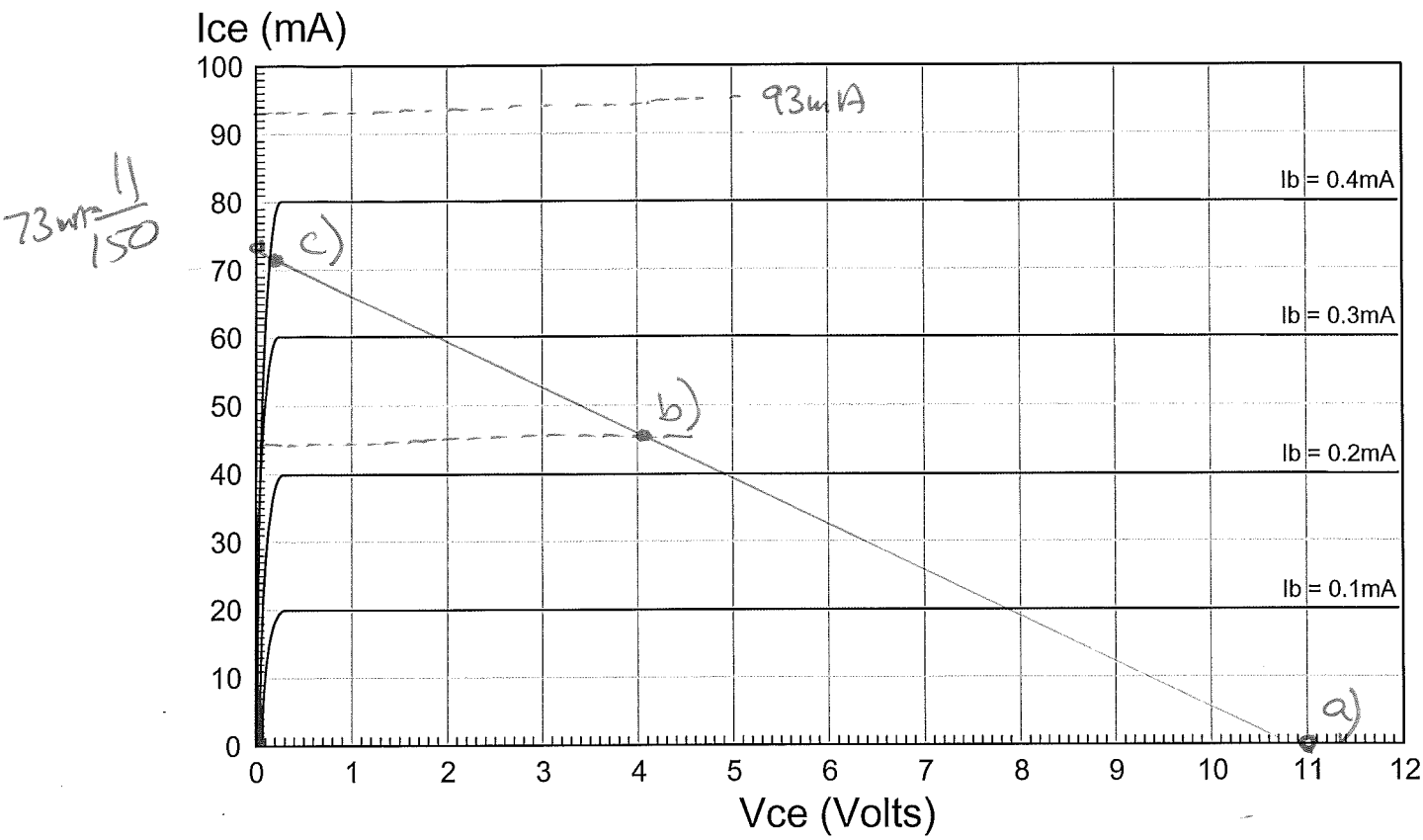

$V_{in}=5$

$I_b = \frac{5-.7}{20k} = 215\mu A$

$I_c = 200 I_b = 43mA$

$V_{in}=10V$

$I_b = \frac{10-.7}{20k} = .465mA$

$I_c = 200 I_b = 93mA$

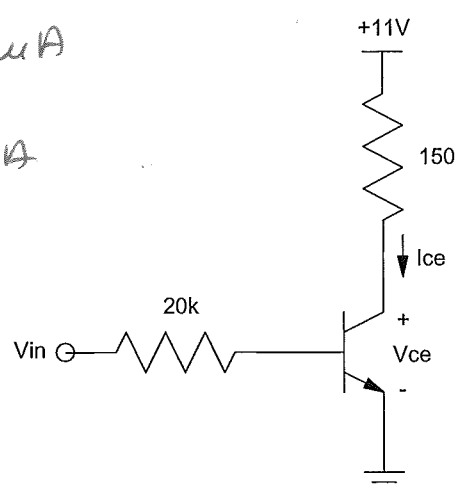

3) Design a transistor switch which allows you to turn on and off a 50W LED at 1.7 Amps

- Input: 0V / 5V binary signal capable of driving up to 20mA
- Output: 50W LED. Vf = 30V @ 1.7A. 5000 Lumens @ 1.7A.
- Relationship:
  - Off (0A) when the input is 0V
  - On (1.7A) when the input is +5V

Assume you have access to a TIP112 transistor

- Vbe = 1.4V
- Vce(saturation) = 0.9V
- max(Ic) = 2A

$\beta = 1000$

min value of Rb to meet specs	max value of Rb to meet specs	Rc 1.7A when Vin = 5V
180 Ω	2118 Ω	10 Ω

.2V 215 2529

$I_b > 1.7mA$

$R_b = \frac{5 - 1.4}{1.7mA} = 2118$

$I_b = 20mA$

$R_b = \frac{5 - 1.4}{20mA} = 180\Omega$

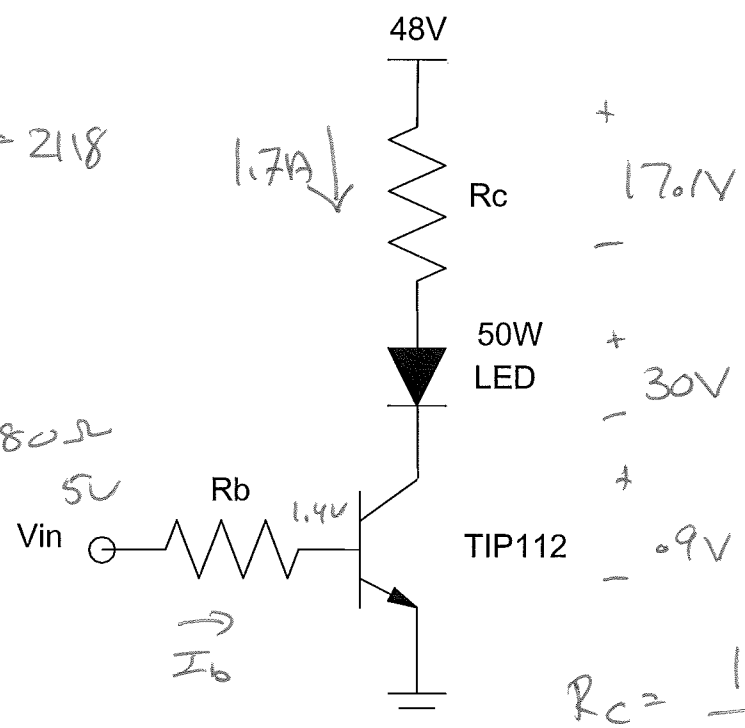

$R_c = \frac{17.1V}{1.7A} = 10\Omega$

4) For the following H-bridge, assume ideal transistors with

- $\beta = 100$
- Vbe = 0.7V
- Vce(sat) = 0.2V

Determine the voltages V1, V2, and the current I

V1	V2	I
9.8V	0.2V	96mA

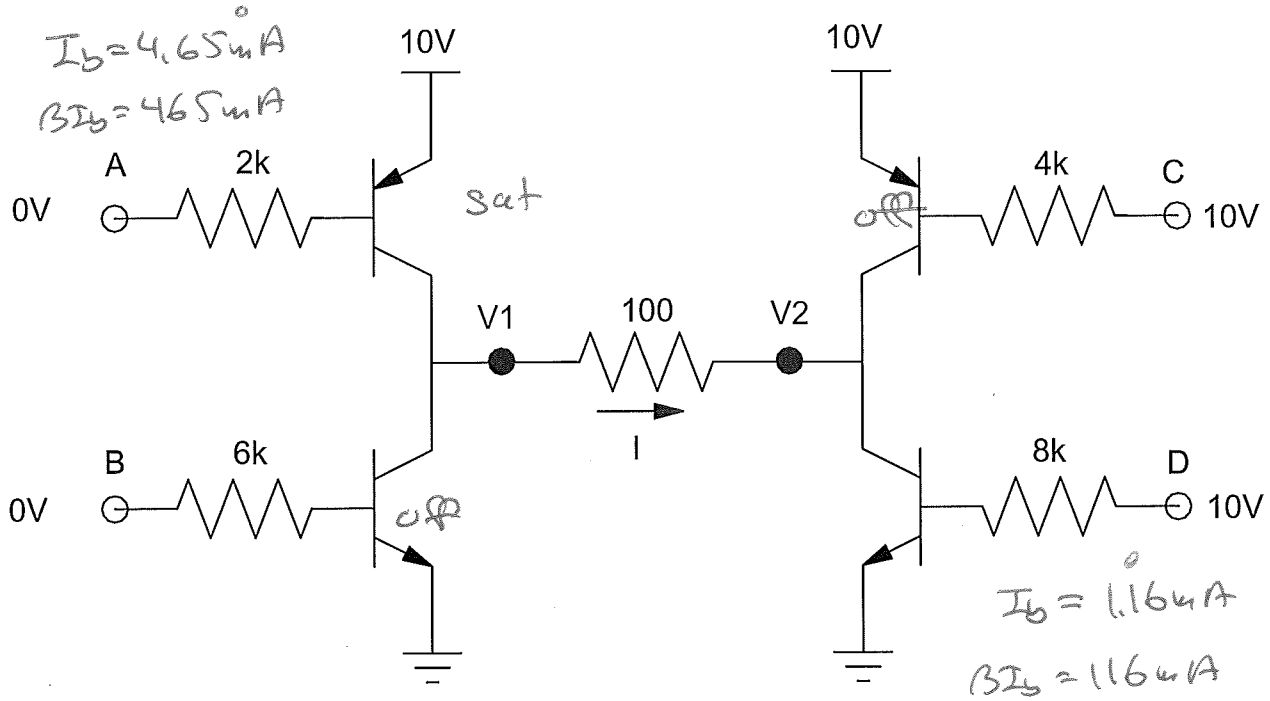

$$\frac{9.6}{100} = 96mA$$

$$I_c = \min(465mA, 96mA, 116mA)$$

winner!

5) Design an H-bridge so that you can deliver

- +100mA
- -100mA, or
- 0mA

to a load (+/- 5mA). Assume each transistor has

- Vbe = 0.7V
- Vce(sat) = 0.2V
- current gain = 100

Ra	Rb	Rc	Rd	RL
4K	4K	4K	4K	96

anything less than 9.3k

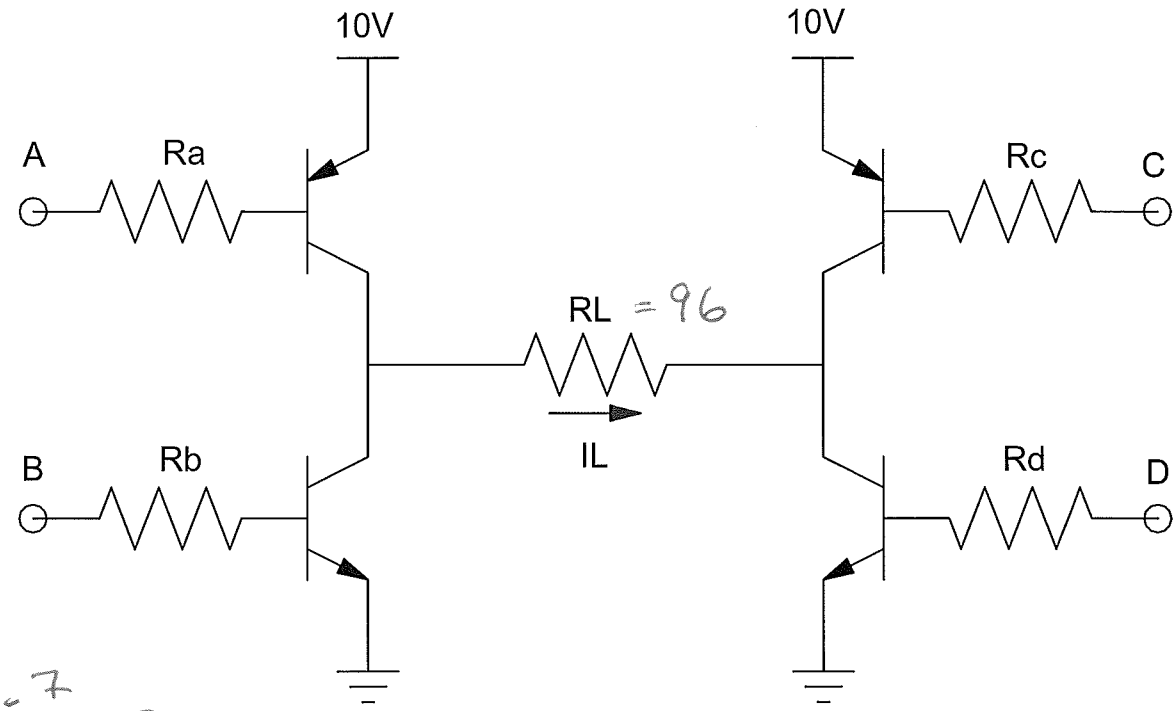

$R_x = \frac{10 - .7}{1mA} = 9.3k$

$R_L = \frac{9.6V}{100mA} = 96\Omega$

~~100-.7~~

to be safe, let $R_x = 4K$

Bonus! Presently, if nothing changes, we (USA) will spend $49 trillion on health care over the next 10 years. Based upon a recent study funded by the Koch brothers, how much of that can be attributed to the cost of our system of health insurance? (i.e. pays for the insurance companies, the billing departments in hospitals, time doctors spend filling out paperwork for insurance claims, etc.)?

34% ($17 trillion)