ECE 320 - Solution to Homework #1

EE 206 Review, Phasors. Due Monday, August 27th, 2018

1. Voltage Nodes:

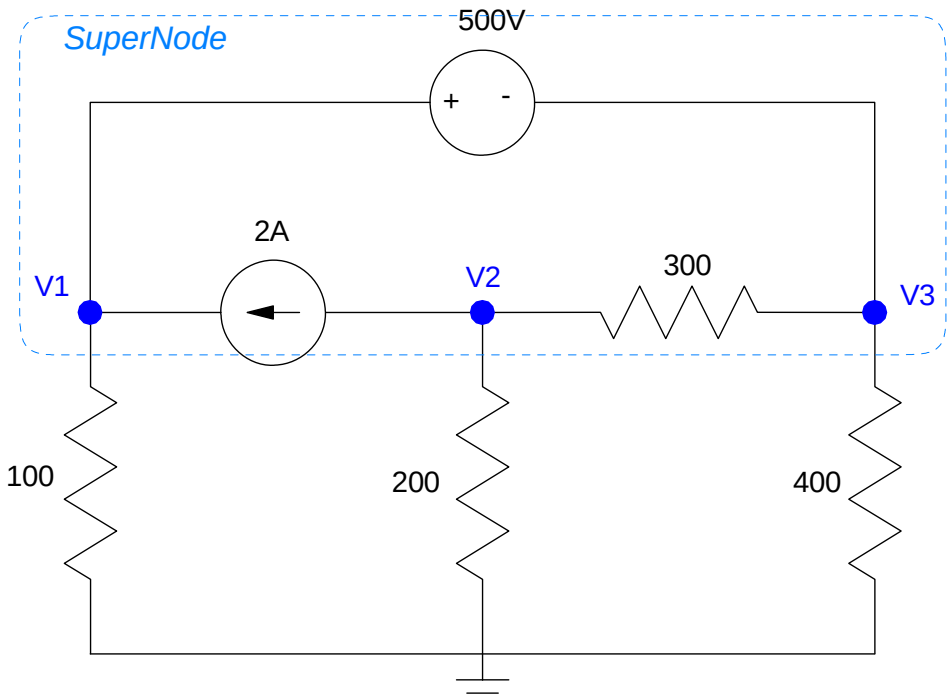

a) Write the voltage node equations. You have 3 voltge nodes, so you need 3 equations to solve for 3 unknowns. Start with the easy one (the voltage source)

$$V_1 - V_3 = 500 \qquad (1)$$

Sum the current from node V2 to zero:

$$2 + \left(\frac{V_2}{200}\right) + \left(\frac{V_2 - V_3}{300}\right) = 0 \qquad (2)$$

We need one more equation. Define a supernode (shown in blue dashes - other definitions are also valid). Sum the current from the super-node to zero.

$$\left(\frac{V_1}{100}\right) + \left(\frac{V_2}{200}\right) + \left(\frac{V_3}{400}\right) = 0 \qquad (3)$$

b) Solve using Matlab (or similar program) Group terms

$$V_1 - V_3 = 500$$

$$\left(\frac{1}{200} + \frac{1}{300}\right) V_2 - \left(\frac{1}{300}\right) V_3 = -2$$

$$\left(\frac{1}{100}\right) V_1 + \left(\frac{1}{200}\right) V_2 + \left(\frac{1}{400}\right) V_3 = 0$$

Place in matrix form

$$\begin{bmatrix} 1 & 0 & -1 \\ 0 & \left(\frac{1}{200}+\frac{1}{300}\right) & \left(\frac{-1}{300}\right) \\ \left(\frac{1}{100}\right) & \left(\frac{1}{200}\right) & \left(\frac{1}{400}\right) \end{bmatrix} \begin{bmatrix} V_1 \\ V_2 \\ V_3 \end{bmatrix} = \begin{bmatrix} 500 \\ -2 \\ 0 \end{bmatrix}$$

Solve using Matlab

```
>> A = [1,0,-1 ; 0,1/200+1/300,-1/300 ; 1/100, 1/200, 1/400]

    1.0000         0   -1.0000
         0    0.0083   -0.0033
    0.0100    0.0050    0.0025

>> B = [500 ; -2 ; 0]

   500
    -2
     0

>> V = inv(A)*B

  237.9310
 -344.8276
 -262.0690
```

c) Check your answers in PartSim (or similar circuit simulator)

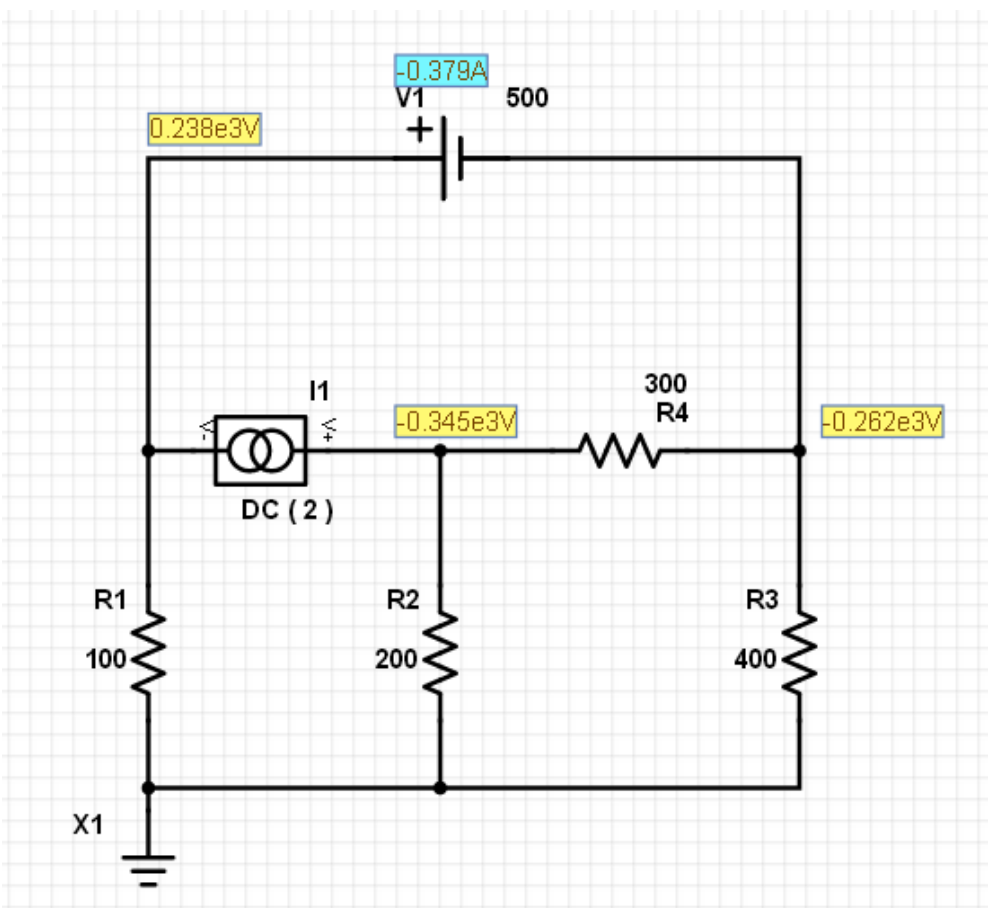

2. Current Loops:

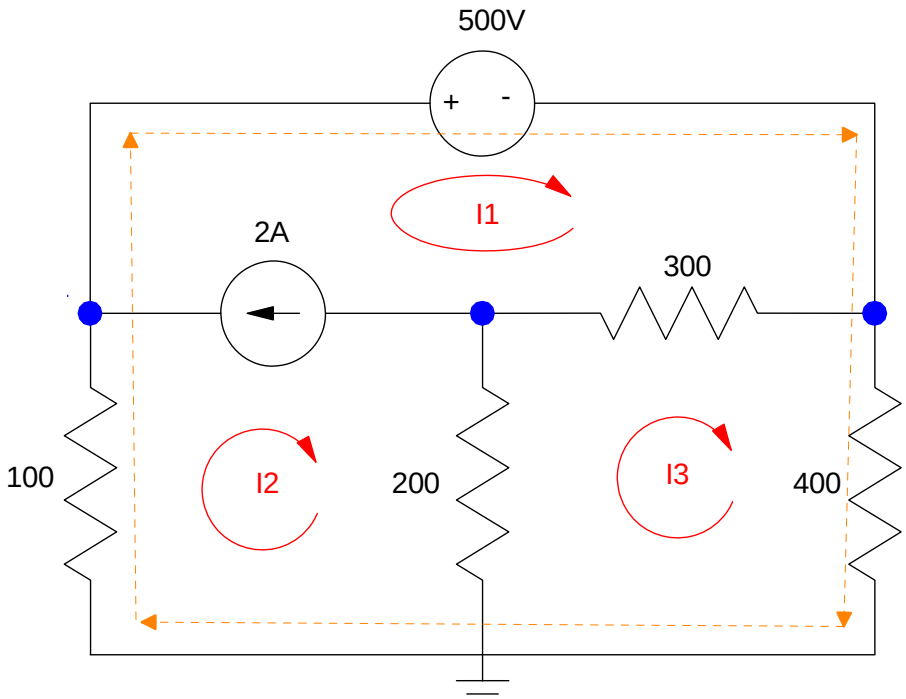

a) Write the current loop equations. There are three windows (unknown currents). We need to write 3 equations to solve for 3 unknowns. Start with the easy one (the current source)

$$I_1 - I_2 = 2 \qquad (1)$$

Sum the voltage around loop I3 to zero

$$200(I_3 - I_2) + 300(I_3 - I_1) + 400I_3 = 0 \qquad (2)$$

For the 3rd equation, take some other path that avoids the current source (super loop shown in orange. There are other options)

$$100I_2 + 500 + 400I_3 = 0 \qquad (3)$$

b) Solve using Matlab (or similar program) Group terms

$$I_1 - I_2 = 2$$

$$-300I_1 - 200I_2 + 900I_3 = 0$$

$$100I_2 + 400I_3 = -500$$

Place in matrix form

$$\begin{bmatrix} 1 & -1 & 0 \\ -300 & -200 & 900 \\ 0 & 100 & 400 \end{bmatrix} \begin{bmatrix} I_1 \\ I_2 \\ I_3 \end{bmatrix} = \begin{bmatrix} 2 \\ 0 \\ -500 \end{bmatrix}$$

Solve with Matlab

```
>> A = [1,-1,0 ; -300,-200,900 ; 0,100,400]

     1    -1     0
  -300  -200   900
     0   100   400

>> B = [2 ; 0 ; -500]

     2
     0
  -500

>> I = inv(A)*B

I1   -0.3793
I2   -2.3793
I3   -0.6552
```

Check: Compute the votlage V1:

```
>> -I(2)*100

  237.9310
```

This matches PartSim

3. Voltage Nodes:

a) Write the voltage node equations for the following circuit

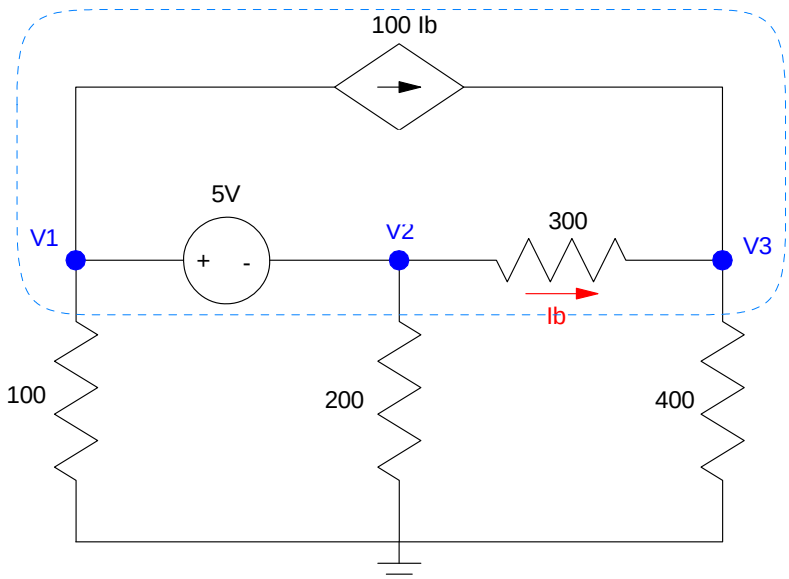

First define Ib in terms of the votlages

$$I_b = \left(\frac{V_2 - V_3}{300}\right) \qquad (1)$$

Write the voltage source equation

$$V_1 - V_2 = 5 \qquad (2)$$

Write the node equations at V3

$$\left(\frac{V_3 - V_2}{300}\right) + \left(\frac{V_3}{400}\right) - 100 I_b = 0 \qquad (3)$$

Supernode (shown in dotted line - other supernodes can be used as well)

$$\left(\frac{V_1}{100}\right) + \left(\frac{V_2}{200}\right) + \left(\frac{V_3}{400}\right) = 0 \qquad (4)$$

Solve using Matlab (or similar program). Group terms

$$\left(\frac{-1}{300}\right) V_2 + \left(\frac{1}{300}\right) V_3 + I_b = 0$$

$$V_1 - V_2 = 5$$

$$\left(\frac{-1}{300}\right) V_2 + \left(\frac{1}{300} + \frac{1}{400}\right) V_3 - 100 I_b = 0$$

$$\left(\frac{V_1}{100}\right) + \left(\frac{V_2}{200}\right) + \left(\frac{V_3}{400}\right) = 0$$

Place in matrix form

$$\begin{bmatrix} 0 & \left(\frac{-1}{300}\right) & \left(\frac{1}{300}\right) & 1 \\ 1 & -1 & 0 & 0 \\ 0 & \left(\frac{-1}{300}\right) & \left(\frac{1}{300}+\frac{1}{400}\right) & -100 \\ \left(\frac{1}{100}\right) & \left(\frac{1}{200}\right) & \left(\frac{1}{400}\right) & 0 \end{bmatrix} \begin{bmatrix} V_1 \\ V_2 \\ V_3 \\ I_b \end{bmatrix} = \begin{bmatrix} 0 \\ 5 \\ 0 \\ 0 \end{bmatrix}$$

Solve woih Matlab

```
>> A = [0,-1/300,1/300,1 ; 1,-1,0,0 ; 0,-1/300,1/300+1/400,-100 ; 1/100,1/200,1/400,0]

         0   -0.0033    0.0033    1.0000
    1.0000   -1.0000         0         0
         0   -0.0033    0.0058 -100.0000
    0.0100    0.0050    0.0025         0

>> B = [0;5;0;0]

     0
     5
     0
     0

>> V= inv(A)*B

V1    2.1398
V2   -2.8602
V3   -2.8391
Ib   -0.0001
```

4. Current Loops:

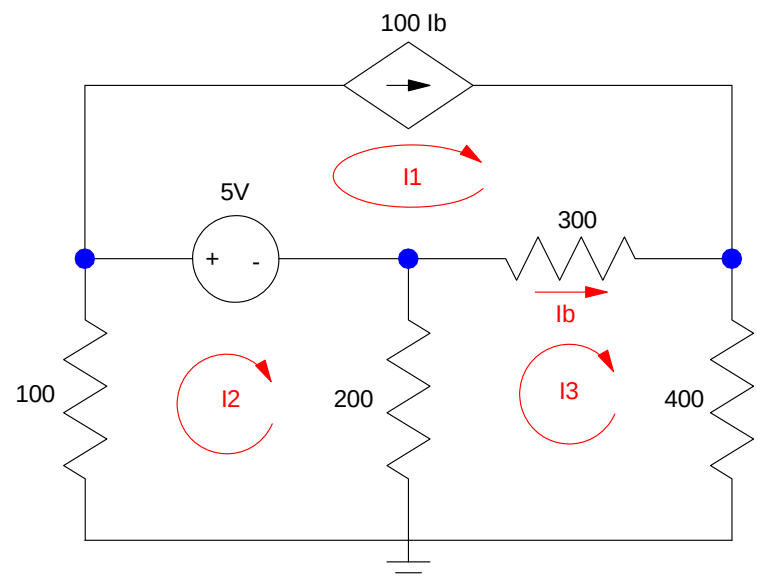

Problem 3 & 4

a) Write the current loop equations for the following circuit

$$I_b = I_3 - I_1$$

$$I_1 = 100 I_b$$

$$100 I_2 + 5 + 200(I_2 - I_3) = 0$$

$$200(I_3 - I_2) + 300(I_3 - I_1) + 400 I_3 = 0$$

b) Solve using Matlab (or similar program). Group terms

$$I_b - I_3 + I_1 = 0$$

$$I_1 - 100 I_b = 0$$

$$300 I_2 - 200 I_3 = -5$$

$$-300 I_1 - 200 I_2 + 900 I_3 = 0$$

Place in matrix form

$$\begin{bmatrix} 1 & 0 & -1 & 1 \\ 1 & 0 & 0 & -100 \\ 0 & 300 & -200 & 0 \\ -300 & -200 & 900 & 0 \end{bmatrix} \begin{bmatrix} I_1 \\ I_2 \\ I_3 \\ I_b \end{bmatrix} = \begin{bmatrix} 0 \\ 0 \\ -5 \\ 0 \end{bmatrix}$$

Solve with matlab

```
>> A = [1,0,-1,1 ; 1,0,0,-100 ; 0,300,-200,0 ; -300,-200,900,0]

     1     0    -1     1
     1     0     0  -100
     0   300  -200     0
  -300  -200   900     0
```

```
>> B = [0;0;-5;0]

     0
     0
    -5
     0

>> I = inv(A)*B

I1   -0.0070
I2   -0.0214
I3   -0.0071
Ib   -0.0001
```

5) Assume Vin contains a DC and 16Hz (100 rad/sec) signal:

$$V_{in} = 5 + 3\sin(100t)$$

a) Determine the impedances of the inductor, capacitor, and resistor at DC and 100 rad/sec

DC (blue)

$\omega = 0$

$L \rightarrow j\omega L = 0$

$C \rightarrow \frac{1}{j\omega C} = \infty$

AC (red)

$\omega = 100$

$L \rightarrow j\omega L = j10$

$C \rightarrow \frac{1}{j\omega C} = -j1000$

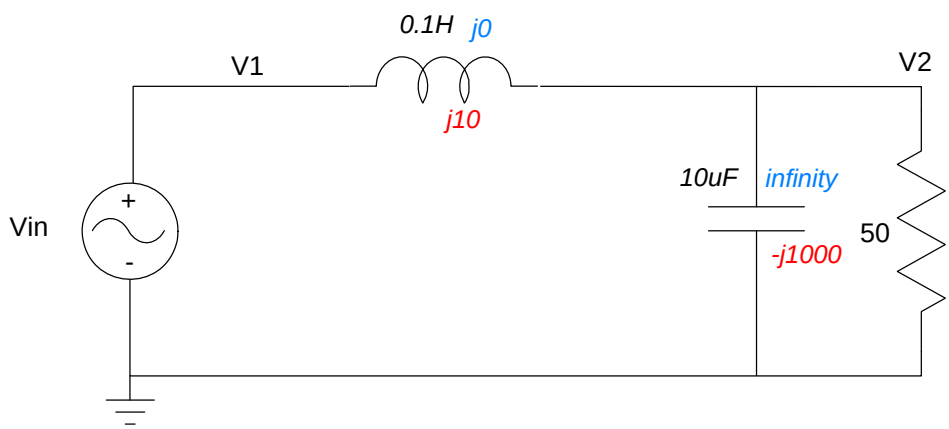

b) Determine the voltage, V2, using phasor analysis

Voltage node equation

DC

$V_{in} = 5$

$V_2 = V_{in} = 5$

AC

$V_{in} = -j3$

$$\left(\frac{V_2 - V_{in}}{j10}\right) + \left(\frac{V_2}{-j1000}\right) + \left(\frac{V_2}{50}\right) = 0$$

$V_2 = 2.97\angle -101^0$ (polar form)

$v_2(t) = 2.97\cos(100t - 101^0)$

$V_2 = -0.567 - j2.915$ (rectangular form)

$v_2(t) = -5.67\cos(100t) + 2.915\sin(100t)$

Total answer: DC + AC

$$\boxed{v_2(t) = 10 + 2.97\cos(100t - 101^0)}$$

$$\boxed{v_2(t) = 5 - 5.67\cos(100t) + 2.915\sin(100t)}$$

c) Check your answer using PartSim (or similar program)

Input the circuit in PartSim. Use a transient input (sinusoid) with a

- 10V DC offset
- 3V AC amplitude
- 15.915Hz (100 rad/sec)

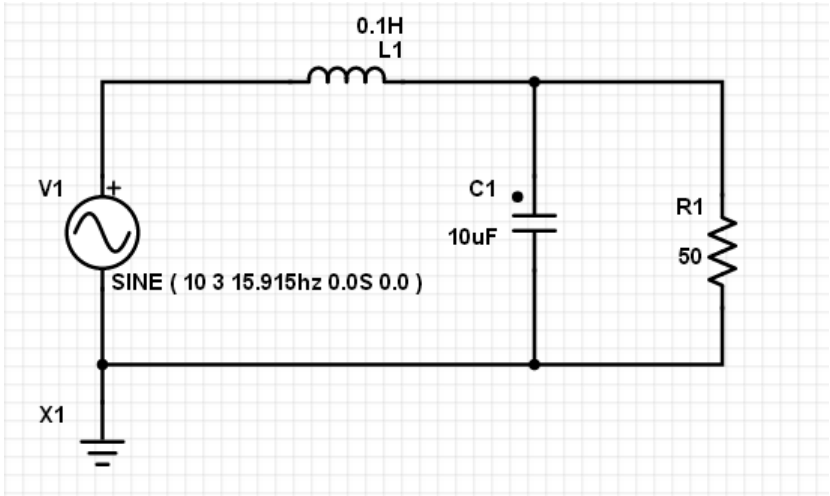

Run a transient simulation for several cycles

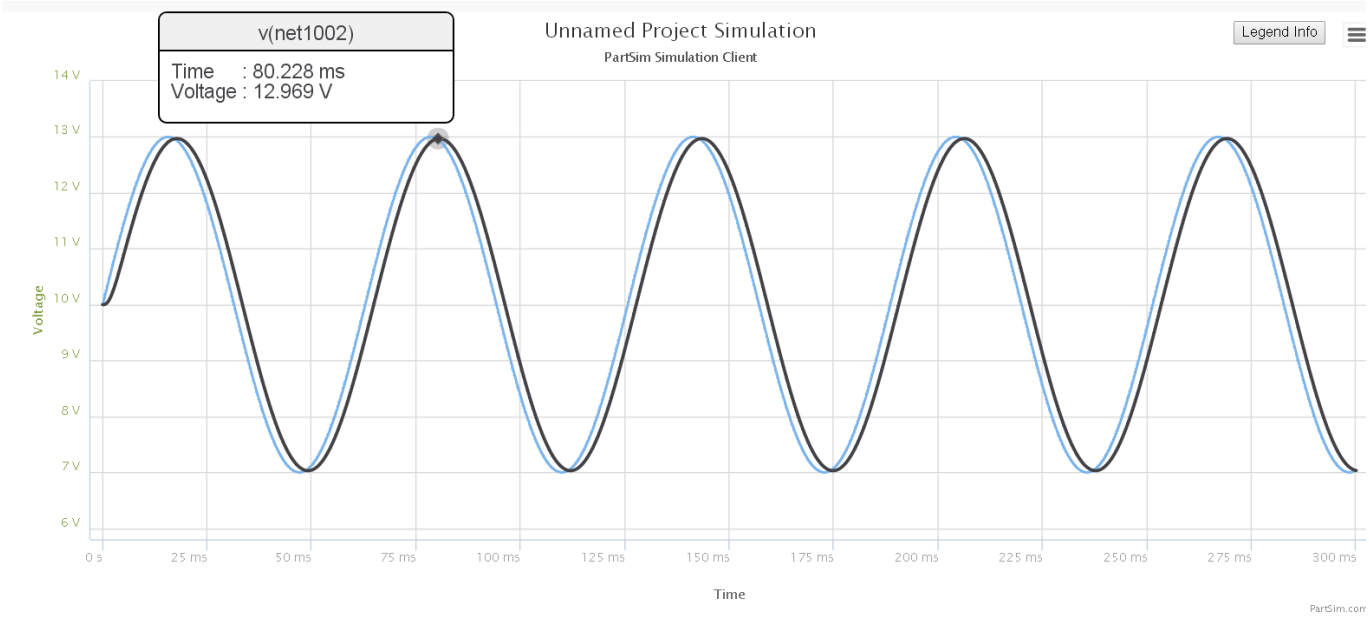

The DC signal at the output (black) is 10V

The AC signal is 2.969Vp (vs. 2.97Vp computed)

The AC signal has a small delay (-10 degrees computed)

6) Assume Vin contains a DC and 160Hz signal:

$$V_{in} = 5 + 3\sin(1000t)$$

a) Determine the impedances of the inductor, capacitor, and resistor at DC and 1000 rad/sec

DC	AC (1000 rad/sec)
no change	$\omega = 1000$
L = 0	$L \rightarrow j\omega L = j100$
C = infinity	$C \rightarrow \frac{1}{j\omega C} = -j100$
	$V_{in} = -j3$

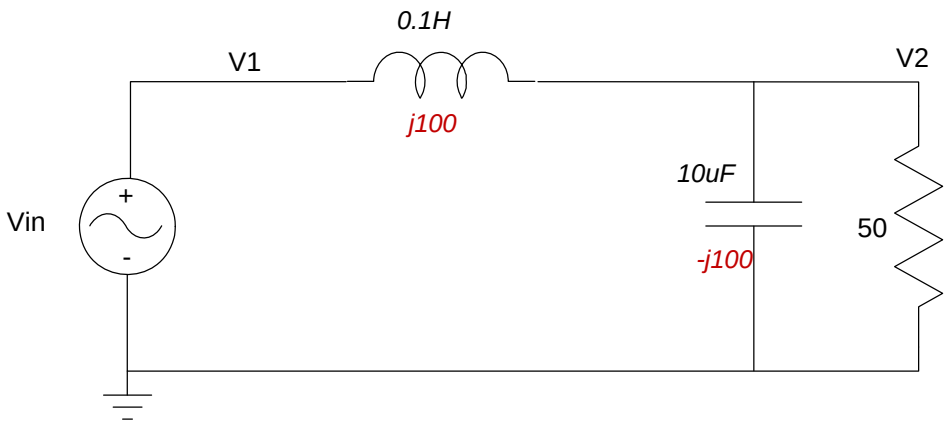

b) Determine the voltage, V2, using phasor analysis

DC	AC
$V_2 = V_1 = 5$	$50 \| \| -j100 = 40 - j20$
	$V_2 = \left(\frac{40-j20}{(40-j20)+(j100)}\right)(0 - j3)$
	$V_2 = 1.5\angle 180^0$
	$v_2(t) = 1.5\cos(1000t + 180^0)$

Total answer: DC + AC

$$\boxed{v_2(t) = 5 + 1.5\cos(1000t + 180^0)}$$

Checking in PartSim (not required)

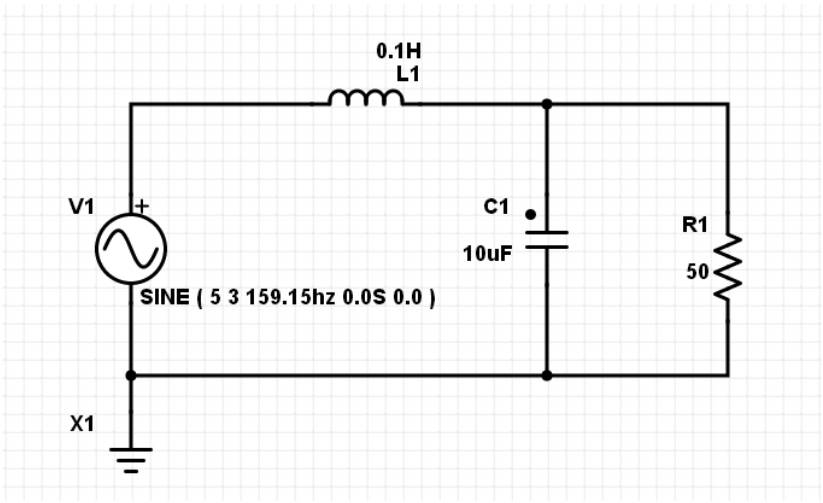

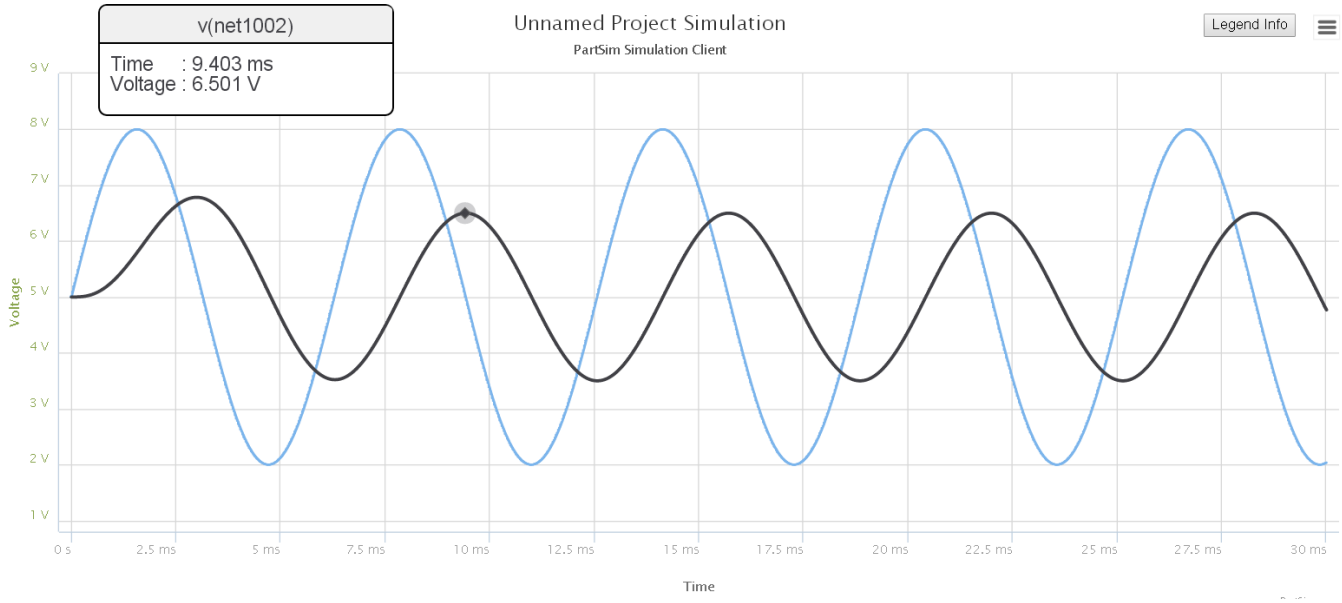

DC level = 5V (vs. 5.00V computd)

AC = 1.501Vp (vs. 1.50V computed)

Output is delayed by 90 degrees (vs. 90 degrees computed)