ECE 320 - Solution to Homework #3

Ideal Diodes, Light Emitting Diodes. Due Monday, September 10th, 2018

Ideal Diodes

1) Assume ideal silicon diodes. Determine the voltages and currents for this circuit.

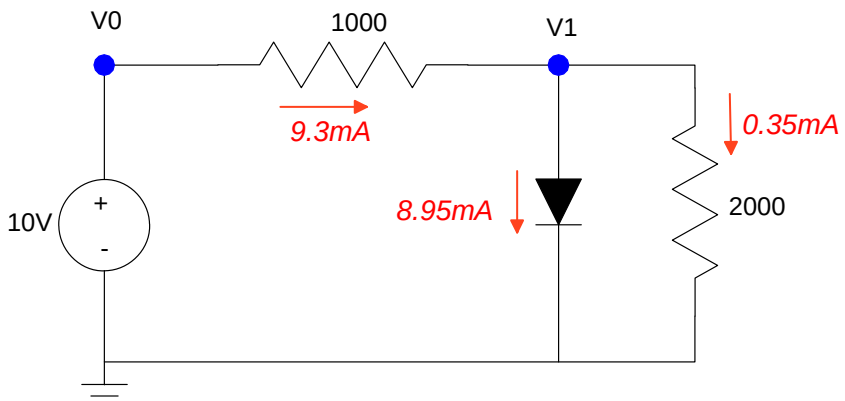

Problem 1

Assume the diode is on

V1 = 0.7V

The currents must add to zero

$$I_{in} = I_{out}$$

$$\left(\frac{10V - 0.7V}{1k}\right) = I_d + \left(\frac{0.7V}{2k}\right)$$

$$I_d = 8.95mA$$

Check: If the diode is on, the current must be positive.

2) Assume ideal silicon diodes. Determine the voltages and currents for the following circuit when Vin = 10V as shown.

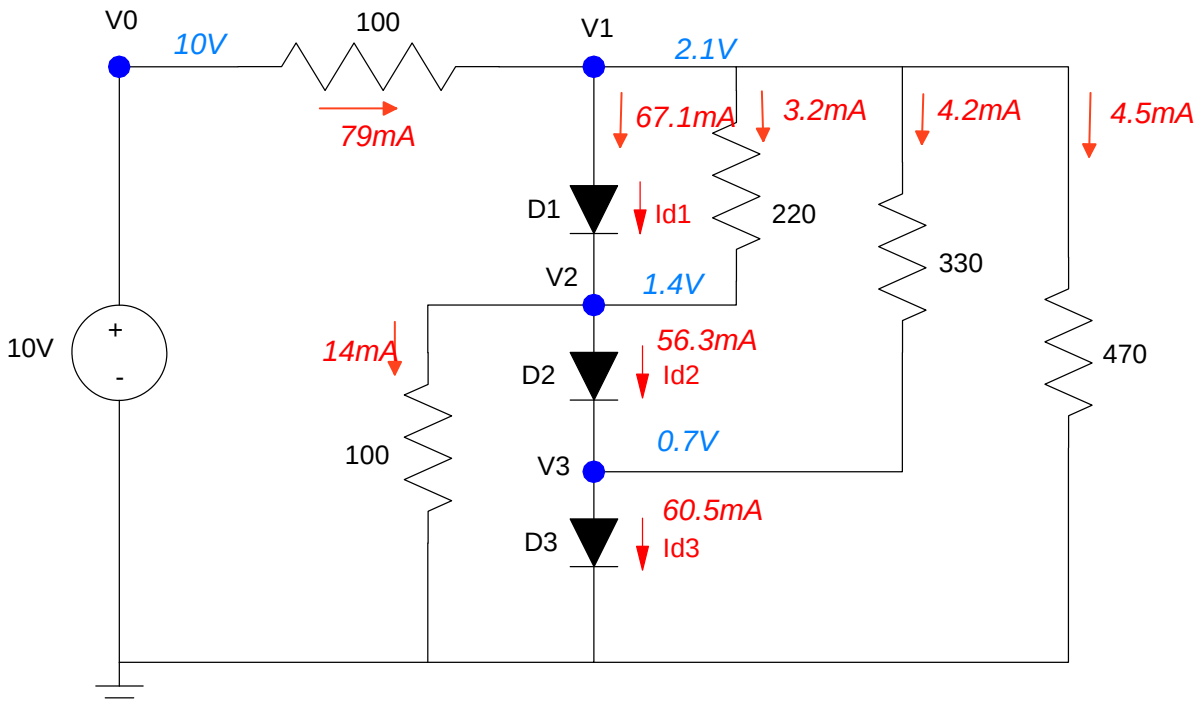

Assume all diodes are on.

- V3 = 0.7V, V2 = 1.4V, V1 = 2.1V

Current In = Current out

$$\left(\frac{10V-2.1V}{100}\right) = I_{d1} + \left(\frac{2.1V-1.4V}{220}\right) + \left(\frac{2.1V-0.7V}{330}\right) + \left(\frac{2.1V}{470}\right)$$

$$I_{d1} = 67.1mA$$

$$I_{d1} + \left(\frac{2.1V-1.4V}{220}\right) = \left(\frac{1.4V}{100}\right) + I_{d2}$$

$$I_{ds} = 56.3mA$$

$$I_{d2} + \left(\frac{2.1V-0.7V}{330}\right) = I_{d3}$$

$$I_{d3} = 60.5mA$$

Check: For the diodes to be on, Id1 > 0, Id2 > 0, Id3 > 0

3) Assume ideal silicon diodes. Determine the voltages and currents when Vin = 3V

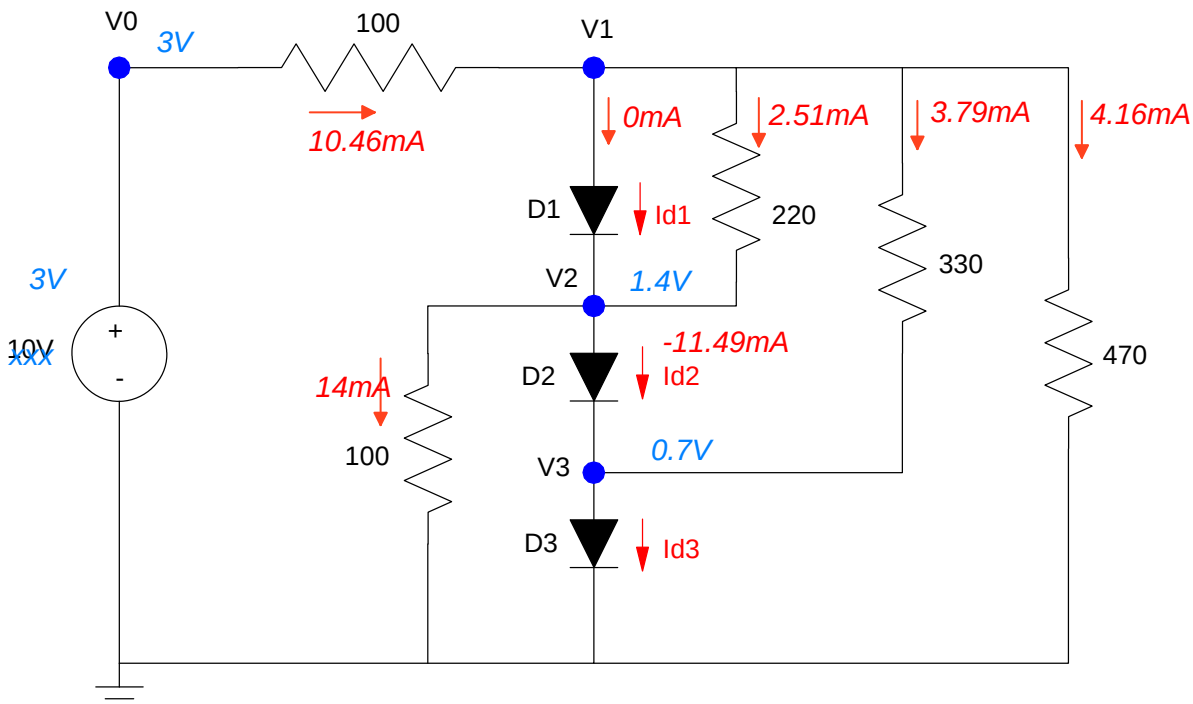

Assume all diodes are on. This doesn't work since it results in

$$\left(\frac{3V-2.1V}{100}\right) = I_{d1} + \left(\frac{2.1V-1.4V}{220}\right) + \left(\frac{2.1V-0.7V}{330}\right) + \left(\frac{2.1V}{470}\right)$$

$$9mA = I_{d1} + 3.2mA + 4.2mA + 4.5mA$$

$$I_{d1} = -2.9mA$$

You can't have negative current through a diode

Assume diode 1 is off, the other two are on. Solve for V1 using voltage nodes

$$\left(\frac{V_1-3}{100}\right) + 0 + \left(\frac{V_1-1.4}{220}\right) + \left(\frac{V_1-0.7}{330}\right) + \left(\frac{V_1}{470}\right) = 0$$

$$V_1 = 1.9532V$$

For the currents to balance:

$$\left(\frac{3V-1.95V}{100}\right) = 0mA + \left(\frac{1.95V-1.4V}{220}\right) + \left(\frac{1.95V-0.7V}{330}\right) + \left(\frac{1.95V}{470}\right)$$

$$10.46mA = 0mA + 2.51mA + 3.79mA + 4.16mA$$

The current through Id2 is negative however. This isn't correct.

Assume diode 2 is off:

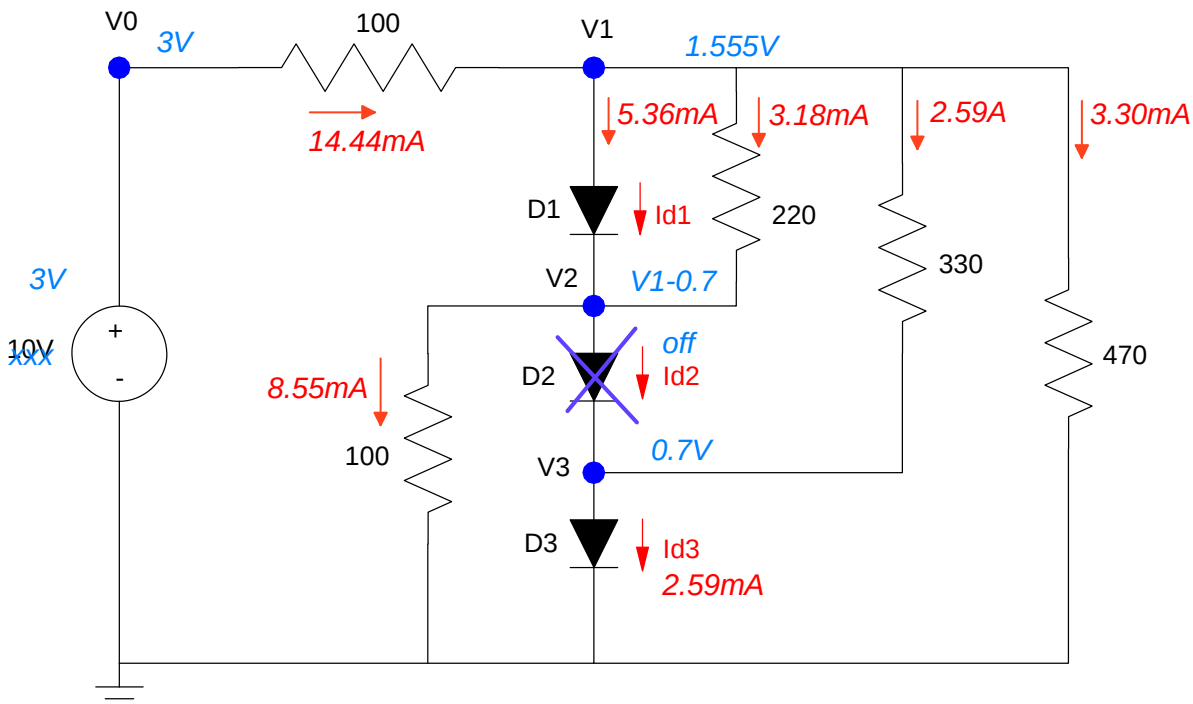

$$\left(\frac{V_1-3}{100}\right)+0+\left(\frac{V_1-0.7}{100}\right)+\left(\frac{V_1-0.7}{330}\right)+\left(\frac{V_1}{470}\right)=0$$

$$V_1 = 1.555V$$

Id1 is then

$$\left(\frac{3-V_1}{100}\right)=I_{d1}+\left(\frac{V_1-(V_1-0.7)}{220}\right)+\left(\frac{V_1-0.7}{330}\right)+\left(\frac{V_1}{470}\right)$$

$$14.44mA = I_{d1}+3.18mA+2.59mA+3.30mA$$

$$I_{d1} = 5.36mA$$

Id2 = 0 (off)

$$I_{d3} = 2.59mA$$

The Piranah RGB LEDs in lab have the following characteristics:

Color	Vf @ 20mA	mcd @ 20mA
red	2.0V	10,000
green	3.2V	10,000
blue	3.2V	10,000

4) Design a circuit to drive these LEDs with a 10V source to produce purple:

- Red = 5390 mcd (53.9%)
- Green = 1797 mcd (17.97%)
- Blue = 8164 mcd (81.64%)

Red:

$$I_r = \left(\frac{5390mcd}{10{,}000mcd}\right)20mA = 10.78mA$$

$$R_r = \left(\frac{10V-2.0V}{10.78mA}\right) = 742\Omega$$

Green:

$$I_g = \left(\frac{1797mcd}{10{,}000mcd}\right)20mA = 3.59mA$$

$$R_g = \left(\frac{10V-3.2V}{3.59mA}\right) = 1894\Omega$$

Blue:

$$I_b = \left(\frac{8164mcd}{10{,}000mcd}\right)20mA = 16.33mA$$

$$R_b = \left(\frac{10V-3.2V}{16.33mA}\right) = 416\Omega$$

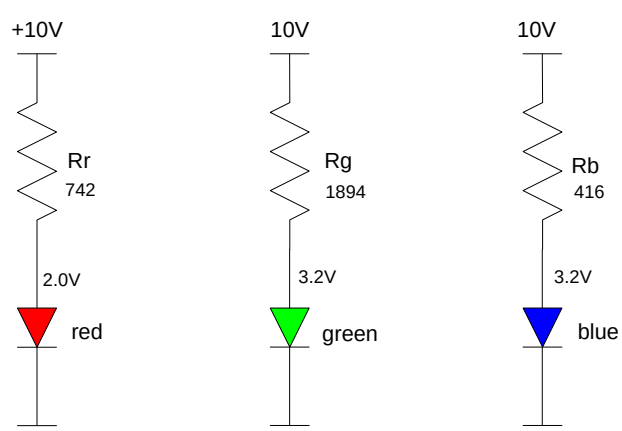

5) Design a circuit to drive these LEDs with a 10V source producing pink:

- Red = 10,000 mcd (100%)
- Green = 7773 mcd (77.73%)
- Blue = 9375 mcd (93.75%)

Red:

$$I_r = \left(\frac{10{,}000mcd}{10{,}000mcd}\right)20mA = 20mA$$

$$R_r = \left(\frac{10V - 2.0V}{20mA}\right) = 400\Omega$$

Green:

$$I_g = \left(\frac{7773mcd}{10{,}000mcd}\right)20mA = 15.55mA$$

$$R_g = \left(\frac{10V - 3.2V}{15.55mA}\right) = 437\Omega$$

Blue:

$$I_g = \left(\frac{9375mcd}{10{,}000mcd}\right)20mA = 18.75mA$$

$$R_g = \left(\frac{10V - 3.2V}{18.75mA}\right) = 363\Omega$$

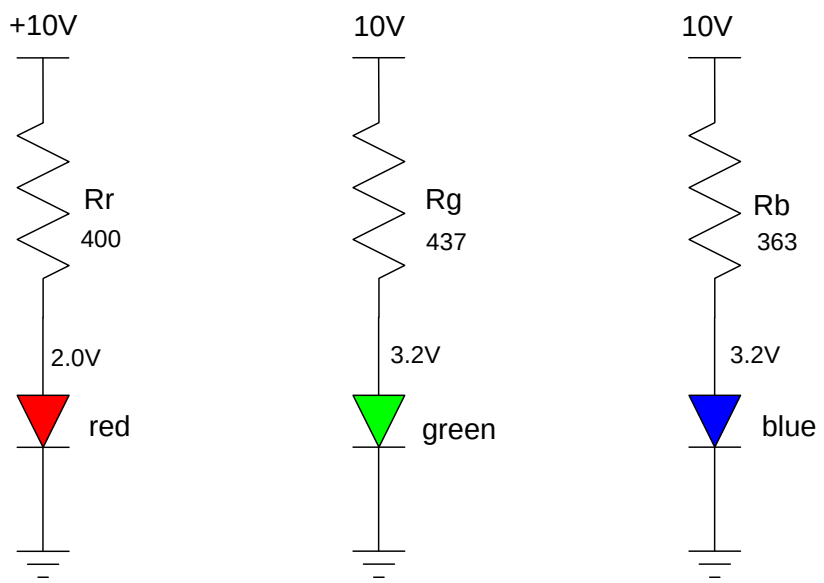

Pink Light

note: If you want to use two different colors, please do so. You can see the intensity of each color (RGB) on the web site:

https://www.rapidtables.com/web/color/color-wheel.html

Lab:

6) Build these RGB LED circuits and measure the voltages (and compute the currents)