ECE 320 - Solution to Homework #6

DC to DC Converters, DC to AC Converters. Due Monday, October 1st, 2018

DC to DC Converters (Buck Converters)

1) Determine the DC and AC votlages at V1 and V2 for the following Buck converter.

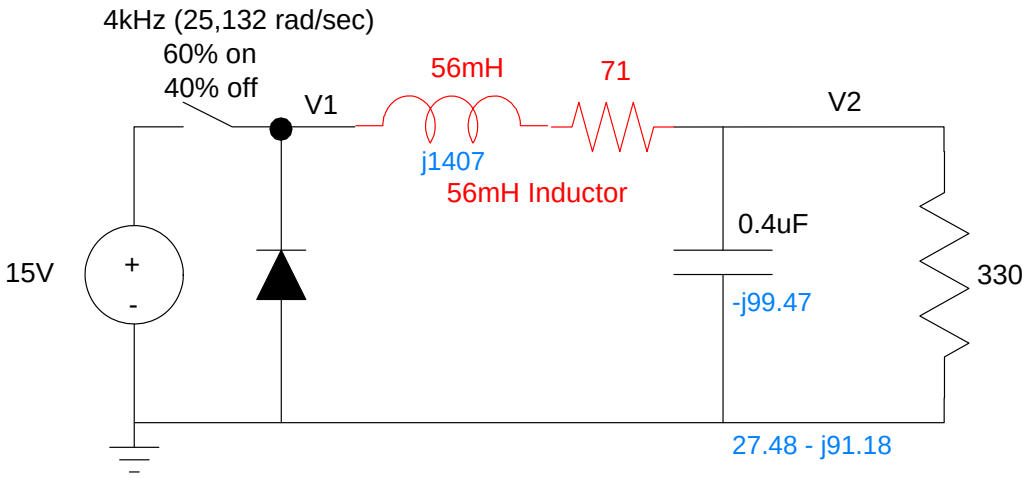

Problem 1 & 2: Buck Converter for Analysis

V1(DC)

$$V_1 = 0.6 \cdot 15V + 0.4 \cdot (-0.7V)$$

$$V_1 = 8.72V$$

V2(DC)

$$V_2 = \left(\frac{330}{330+71}\right) \cdot 8.72$$

$$V_2 = 7.1761V$$

V1(AC)

$$v_1 = 15.7V_{pp}$$

V2(AC)

$$L \rightarrow j\omega L = j1407\Omega$$

$$C \rightarrow \frac{1}{j\omega C} = -j99.47\Omega$$

$$330 || -j99.47 = 27.48 - j91.18$$

$$v_2 = \left(\frac{(27.48-j91.18)}{(27.48-j91.18)+(71+j1407)}\right) 15.7V_{pp}$$

$$v_2 = 1.133V_{pp}$$

2) Modify this Buck converter so that for a 330 Ohm load

- V2(DC) = 5V
- V2(AC) = 100mVpp

By voltage division, at DC

$$V_2 = \left(\frac{330}{330+71}\right) V_1$$

$$V_1 = 6.0758V$$

The duty cycle to get this is

$$V_1 = 6.0758V = \alpha \cdot 15V + (1-\alpha)(-0.7V)$$

$$\alpha = \left(\frac{6.7058}{15.7}\right) = 0.4316$$

You need a 43% duty cycle.

For the ripple to be 100mVpp

Let L = 56mH (arbitrary - what we have in lab), C = 0

$$v_2 = \left(\frac{330}{330+71+j1407}\right) \cdot 15.7V_{pp}$$

$$v_2 = 3.54V_{pp}$$

To reduce this to 100mVpp

$$\frac{1}{\omega C} = \left(\frac{100mV}{3.54V}\right) 330\Omega = 9.31\Omega$$

$$C = 4.27uF$$

Result:

43.16% duty cycle

L = 56mH

C = 4.27uF

3) Check your Buck converter in PartSim. Note: You'll probably need to use a transistor for this circuit

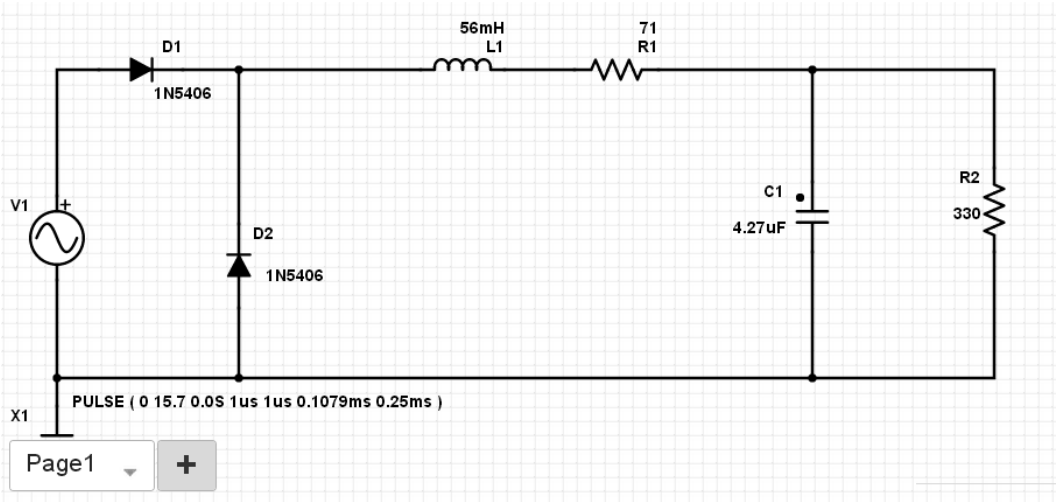

Circuit used for PartSim.
A pulse source with a period of 0.25ms (4kHz) and a pulse width of 0.1079ms (43% of 0.25ms)

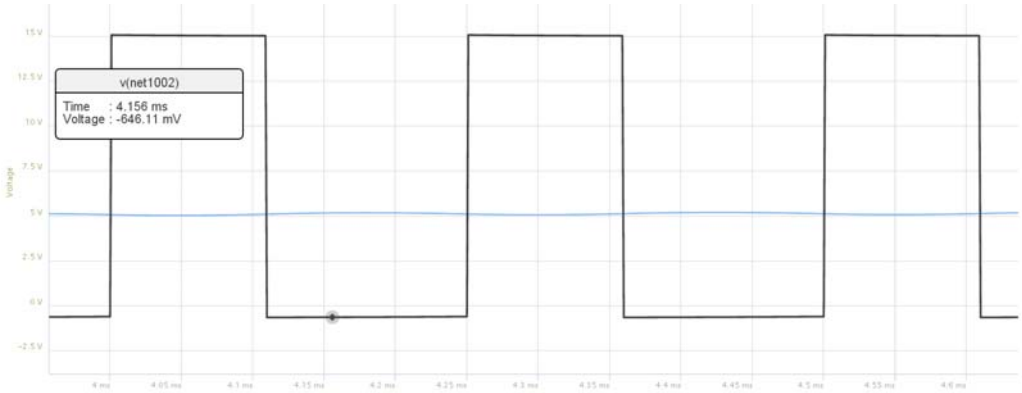

Output waveform for V1 (black) going from -0.646V to +15V (vs. -0.7V and +15V in calculations)

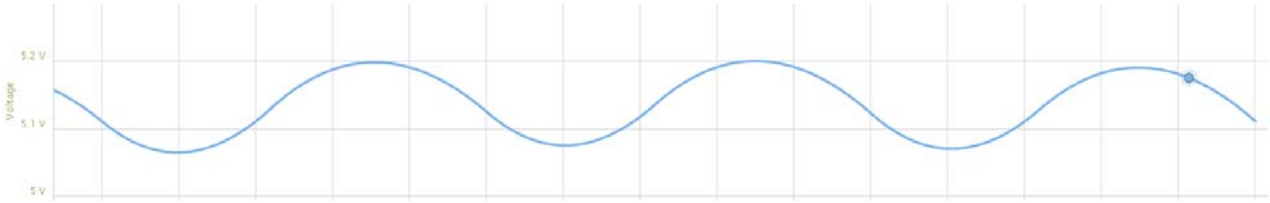

Output wavefor for V2. 130mVpp (vs. 100mVpp computed)

4) Lab: Build this Buck converter in lab Check your Buck converter in PartSim. Note: You'll probably need to use a TIP112 transistor for this circuit

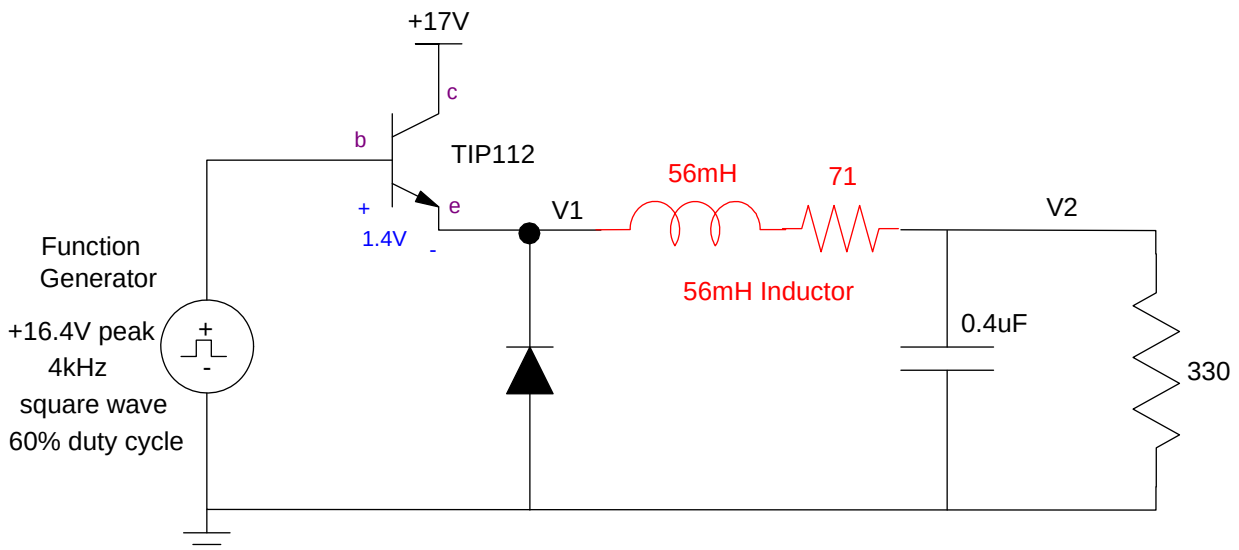

Problem 3 & 4: Buck Converter for Simulation and Test

	V1		V2	
	DC	AC	DC	AC
Calculated (problem 2)	8.72V	15.7Vpp	5.00V	100mVpp
Simulated (problem 3)	8.68V	15.73Vpp	5.15V	130mVpp
Measured (problem 4)	3.22V	9.3Vpp	2.49V	200mVpp

note:

- The function generator would only output 10.00V max, resulting in the DC and AC signals at V1 and V2 being smaller than expected.
- Also, there was considerable noise on V2, resulting in the peak-to-peak measurements of V2 being larger than expected for problem 4

DC to AC Converters (Fourier Transform)

5) Determine the first 5 terms for the Fourier Series for the following waveform (V1 for problem #1).

Plot V1(t) and it's Fourier Series approximation out to the 5th harmonic (20kHz)

```
t = [1:10000]' / 10000;
x = 15*(t<0.6) - 0.7*(t>0.6);

t = t * 2*pi;

X0 = mean(x)

X0 =    8.7185
```

Note: Recall from phasors that

$$a + jb \leftrightarrow a\cos(\omega t) - b\sin(\omega t)$$

```
X1 = 2*mean( y .* exp(-j*t) )

X1 =  -2.9378 - 9.0413i

X2 = 2*mean(y .* exp(-2*j*t))

X2 =   2.3744 - 1.7252i

X3 = 2*mean(y .* exp(-3*t))

X3 =  -1.5863 - 1.1524i

X4 = 2*mean(y .* exp(-4*j*t))

X4 =   0.7339 - 2.2593i

X5 = 2*mean(y .* exp(-5*j*t))

X5 =  -0.0030 - 0.0000i

xf = X0 + real(X1)*cos(t)   - imag(X1)*sin(t);
xf =  xf + real(X2)*cos(2*t) - imag(X2)*sin(2*t);
xf =  xf + real(X3)*cos(3*t) - imag(X3)*sin(3*t);
xf =  xf + real(X4)*cos(4*t) - imag(X4)*sin(4*t);
xf =  xf + real(X5)*cos(5*t) - imag(X5)*sin(5*t);
plot(t,x,t,xf)
```

Note that this is the same as

```
xf = X0;
xf = xf + real( X1 .* exp(j*t) );
xf = xf + real( X2 .* exp(2*j*t) );
xf = xf + real( X3 .* exp(3*j*t) );
xf = xf + real( X4 .* exp(4*j*t) );
xf = xf + real( X5 .* exp(5*j*t) );
plot(t,x,t,xf)
```

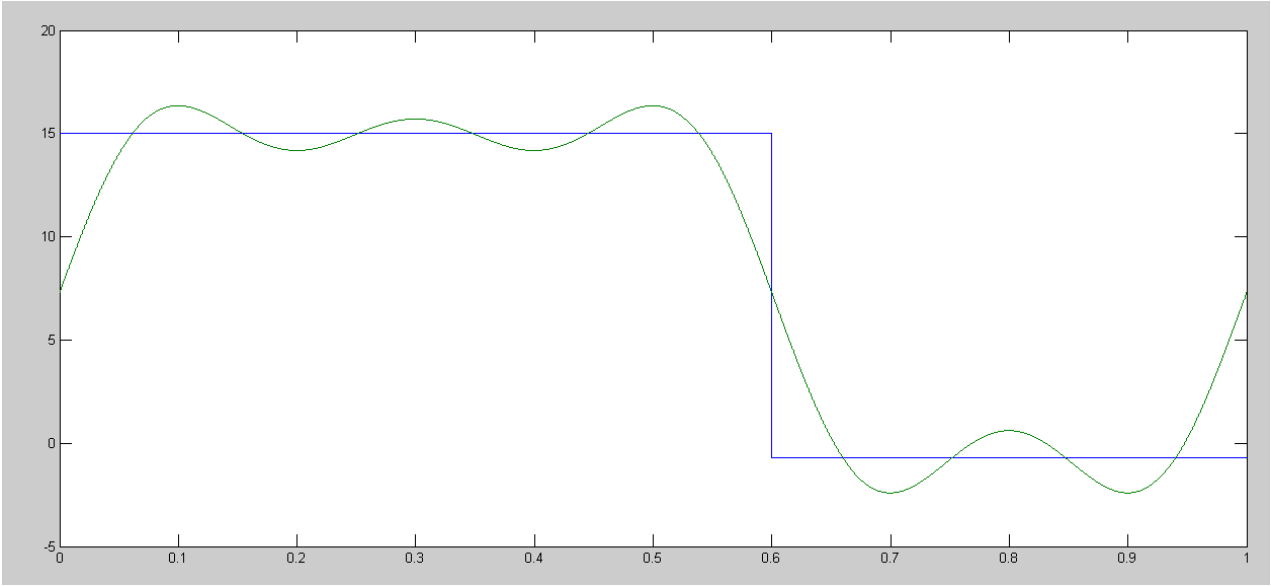
20
15
10
5
0
-5
0
0.1
0.2
0.3
0.4
0.5
0.6
0.7
0.8
0.9
1

6) Determine the Fourier Series approximation for V2(t) for the circuit of problem #1

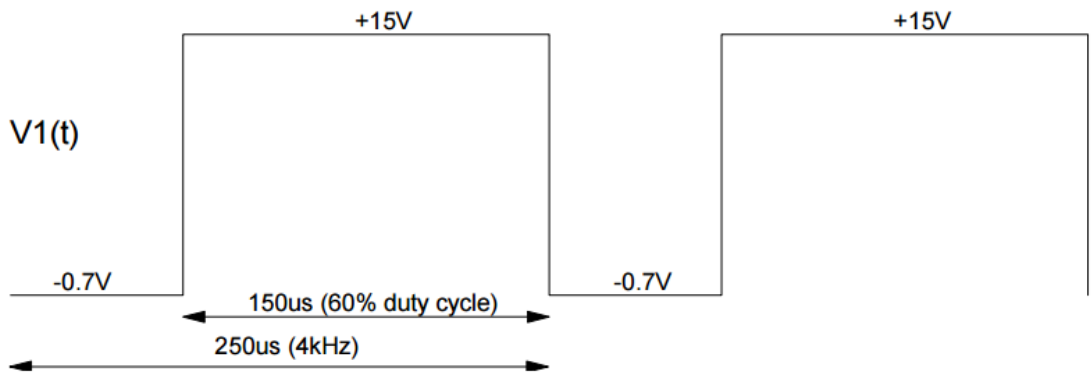

Problem 5 & 6: 60% duty cycle square wave from problem #1

Output = Gain * Input

```
Y0 = (330 / (330 + 71)) * X0

Y0 =    7.1748

% 4kHz
w = 2*pi*4000;
Zc = 1/(j*w*0.4e-6);
ZL = j*w*0.056;
Z = 1 / ( 1/Zc + 1/330);
Y1 = (Z / (Z + 71 + ZL))*x1

Y1 =  -0.0365 + 0.6850i

%8 kHz
w = 2 * 2*pi*4000;
Zc = 1/(j*w*0.4e-6);
ZL = j*w*0.056;
Z = 1 / ( 1/Zc + 1/330);
Y2 = (Z / (Z + 71 + ZL))*x2

Y2 =  -0.0470 + 0.0227i

%12 kHz
w = 3 * 2*pi*4000;
Zc = 1/(j*w*0.4e-6);
ZL = j*w*0.056;
Z = 1 / ( 1/Zc + 1/330);
Y3 = (Z / (Z + 71 + ZL))*x3

Y3 =   0.0113 + 0.0105i

%16 kHz
w = 4 * 2*pi*4000;
Zc = 1/(j*w*0.4e-6);
ZL = j*w*0.056;
Z = 1 / ( 1/Zc + 1/330);
Y4 = (Z / (Z + 71 + ZL))*x4

Y4 =   -0.0041 + 0.0097i
```

```
%20 kHz
w = 5 * 2*pi*4000;
Zc = 1/(j*w*0.4e-6);
ZL = j*w*0.056;
Z = 1 / ( 1/Zc + 1/330);
Y5 = (Z / (Z + 71 + j*w*0.056))*X5

Y5 =     8.4681e-006 +5.9800e-007i

t = [1:10000]' / 10000 * 2 * pi;
y = Y0 + real(Y1)*cos(t) - imag(Y1)*sin(t);
y = y + real(Y2)*cos(2*t) - imag(Y2)*sin(2*t);
y = y + real(Y3)*cos(3*t) - imag(Y3)*sin(3*t);
y = y + real(Y4)*cos(4*t) - imag(Y4)*sin(4*t);
y = y + real(Y5)*cos(5*t) - imag(Y5)*sin(5*t);
plot(t,y)
```

Harmonic	Hz	X(jw)	G(jw)	Y(jw) = G(jw) * X(jw)
DC	0	8.7185	0.8229	7.1748
1	4k	-2.9378 - 9.0413i	-0.0673 - 0.0259i	-0.0365 + 0.6850i
2	8k	2.3744 - 1.7252i	-0.0175 - 0.0031i	-0.0470 + 0.0227i
3	12k	-1.5863 - 1.1524i	-0.0078 - 0.0009i	0.0113 + 0.0105i
4	16k	0.7339 - 2.2593i	-0.0044 - 0.0004i	-0.0041 + 0.0097i
5	20k	-0.0030 - 0.0000i	-0.0028 - 0.0002i	0.0000 + 0.0000i

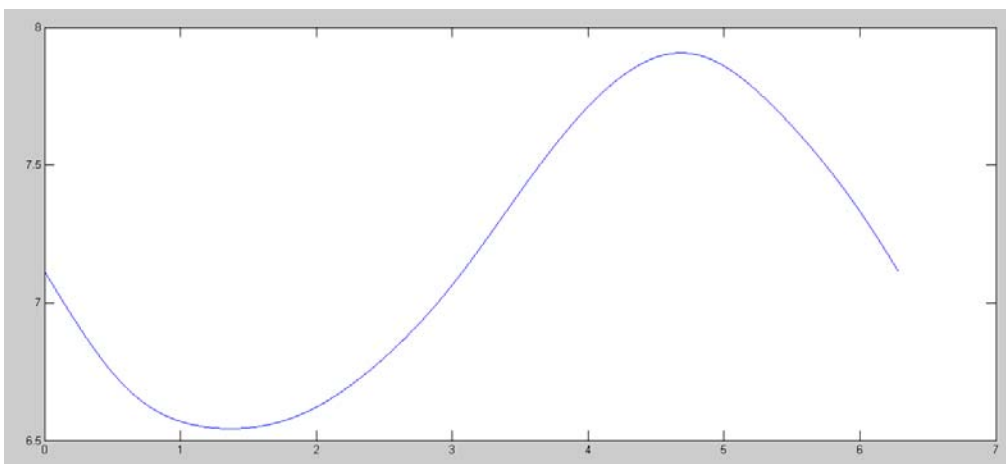

	V1		V2	
	DC	AC	DC	AC
Calculated (problem 1)	8.72V	15.7Vpp	7.17V	100mVpp
Simulated (problem 3)	8.68V	15.73Vpp	7.295V	135mVpp
Calcualted (problem 6)	8.72V	15.7Vpp	7.17V	137mVpp