ECE 320 - Final - Name _____

Part 1: Semiconductors and Diodes. Fall 2019

1) Semiconduuctors and pn junctions

What are holes and electrons?

Electrons are fundamental particles (i.e. quarks) that form covalent bonds and carry electricity when able to flow, acting as negative.

Holes are missing electrons in covalent bonds. Holes can also carry current when able to move and act as + charge carriers.

Why can current flow p to n for a diode but not n to p?

answer 1:

p to n uses majority carriers (low R)

n to p uses minority carriers (high R)

answer 2:

p to n reduces the depletion zone. When reduced to zero (0.7V for silicon), current flows

n to p just increases the size of the depletion zone

answer 3:

voltage p to n in excess of 0.7V for silicon gives electrons enough energ to overcome the potential energy barrier (resuilting in current flowing)

2) Load Lines

Draw the load line for the following circuit. From the load line, determine the operation point (Id, Vd)

Load Line	Vd	Id
show on graph	**4.8V**	**45 mA**

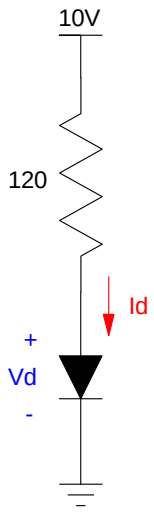

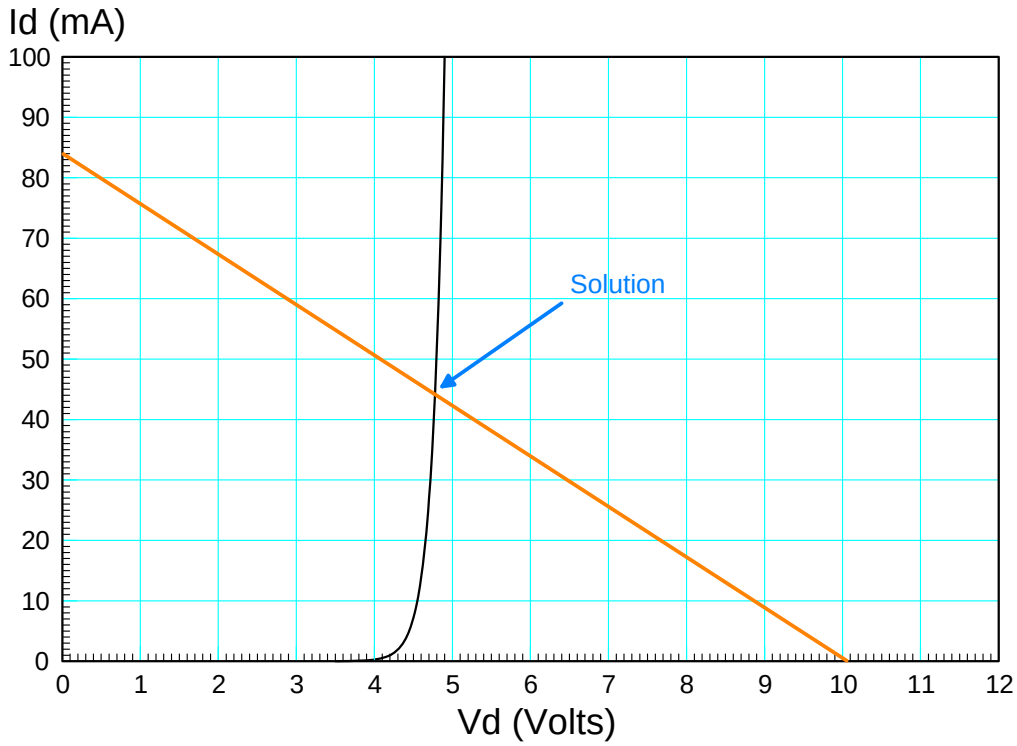

3) Ideal Diode

Assume ideal silicon diodes (Vf = 0.7V). Determine the votlages and currents for the following circuit

V1	V2	V3	Id1	Id2	Id3
2.1V	**1.4V**	**0.7V**	**62.1mA**	**49.8mA**	**54.5mA**

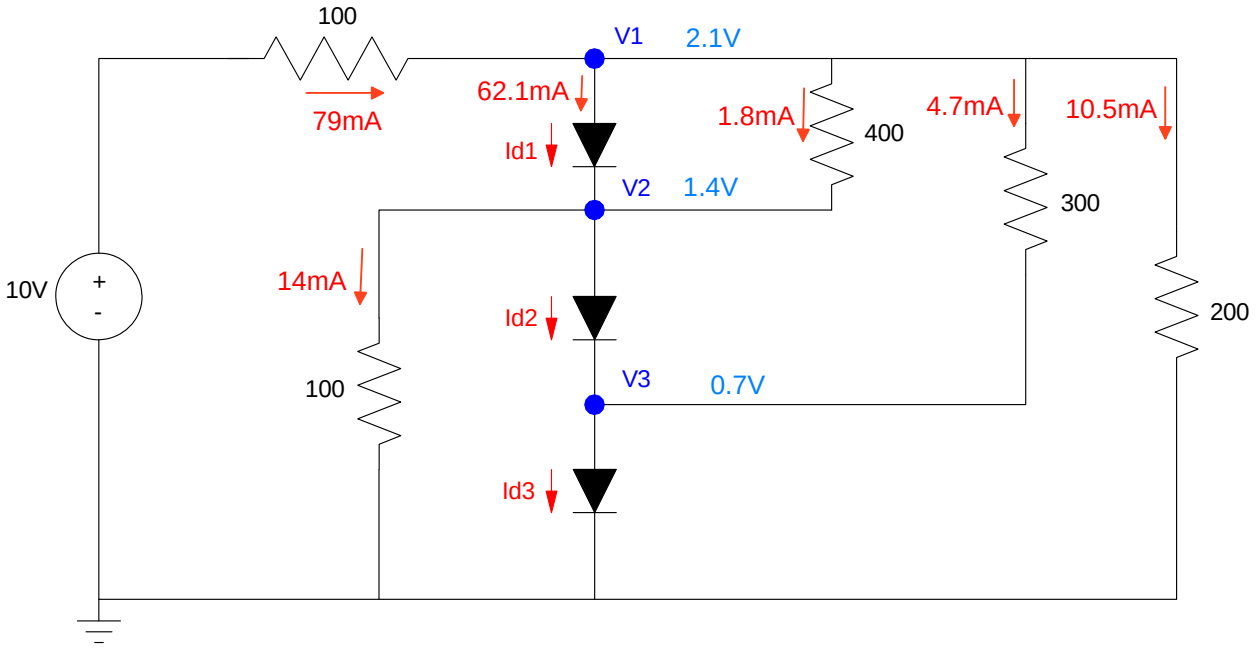

4) AC to DC Converter

Determine the voltages at V1 and V2 (both DC and AC). Assume ideal silicon diodes (Vf = 0.7V)

V1		V2	
DC (avg(V1))	AC (V1pp)	DC (avg(V2))	AC (V2pp)
17.69 V	**3.2167 Vpp**	**14.15 V**	**0.1523 Vpp**

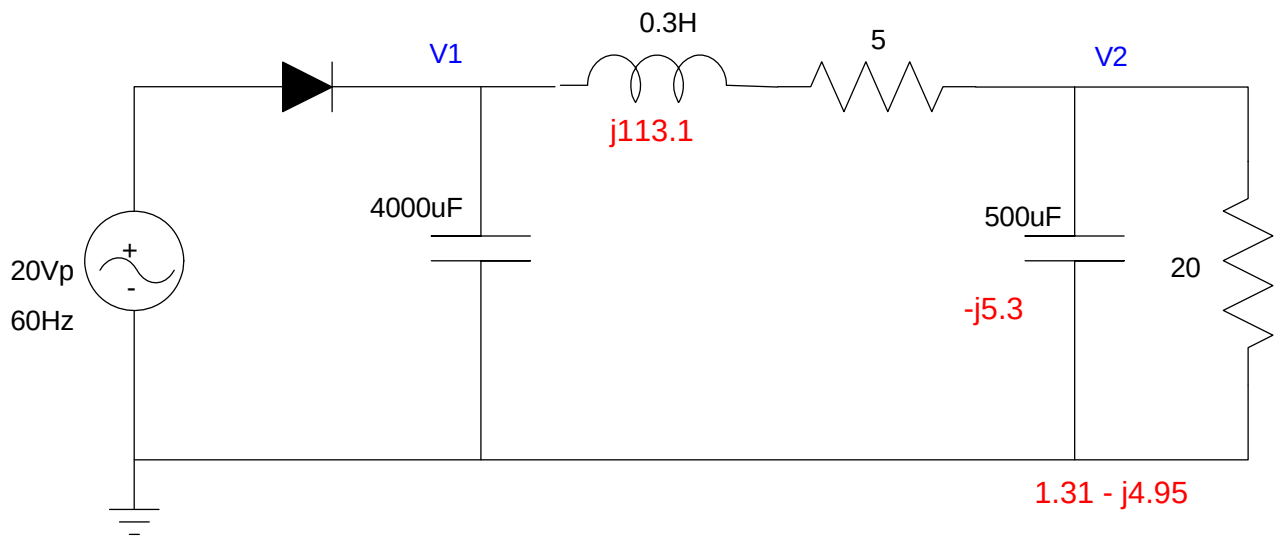

$$V_1(\max) = 19.3V$$

$$I \approx \left(\frac{19.3V}{25\Omega}\right) = 772mA$$

$$I = C\frac{dV}{dt}$$

$$772mA = 4000\mu F \cdot \frac{dV}{1/60s}$$

$$dV = 3.2167V = V_{1pp}$$

$$V_{1(DC)} = 19.3V - \tfrac{1}{2}V_{1pp} = 17.69V$$

$$V_{2(AC)} = \left(\frac{1.31 - j4.95}{(1.31 - j4.95) + (5 + j113.1)}\right) 3.2167V_{pp}$$

$$V_{2(AC)} = 0.1523V_{pp}$$

5) Max / Min Circuit

Determine the votlages and currents for the following max / min circuit. Assume ideal silicon diodes (Vf = 0.7V)

I1	I2	I3	I4	I5	I6
0	**3.6 mA**	**0.7 mA**	**0**	**0**	**5.3 mA**

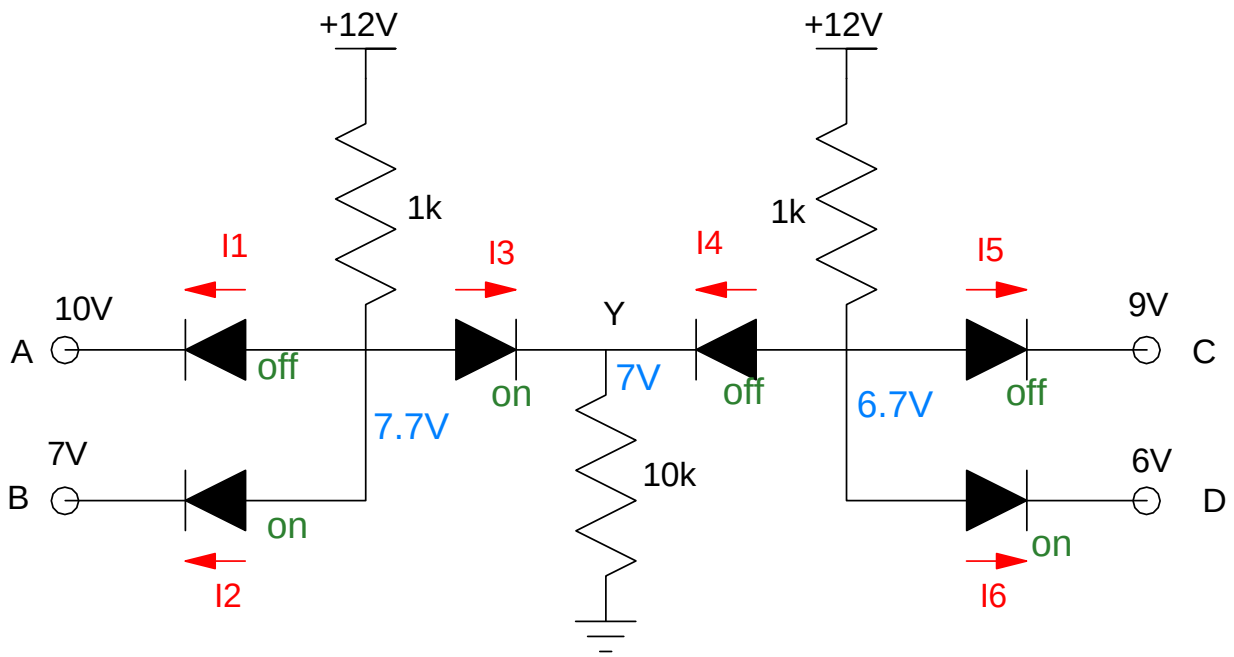

6) Buck Converter

Determine the voltages at V1 and V2. Assume ideal silicon diodes (Vf = 0.7V)

V1		V2	
DC (avg(V1))	AC (V1pp)	DC (avg(V2))	AC (V2pp)
15.86V	**20.7Vpp**	**13.21V**	**2.1919Vpp**

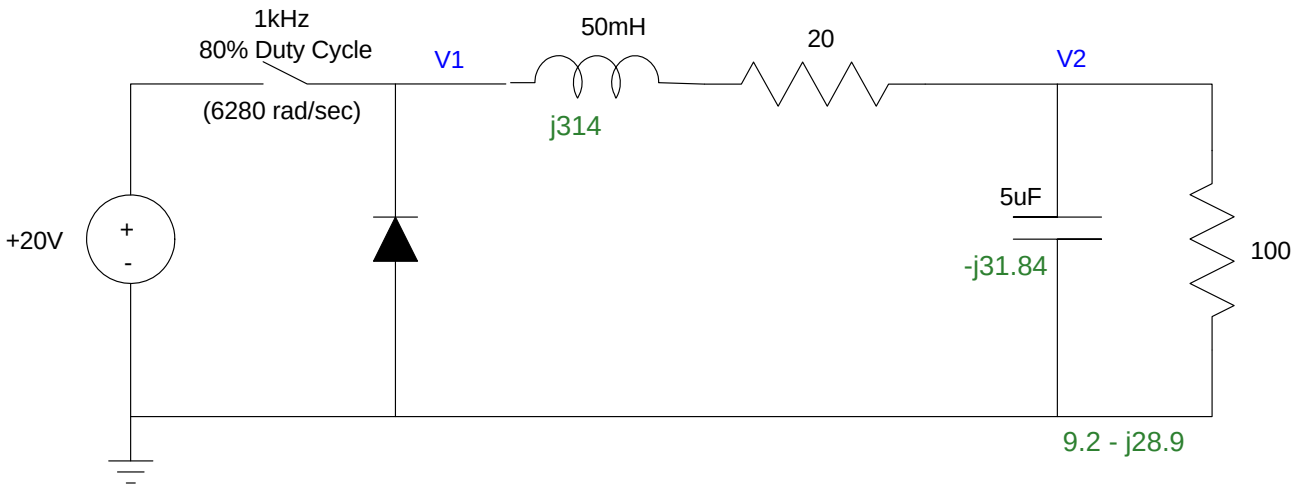

$$V_{1(DC)} = 0.8 \cdot 20 - 0.2 \cdot 0.7$$

$$V_{1(DC)} = 15.86V$$

$$V_{2(DC)} = \left(\frac{100}{100+20}\right) V_{1(DC)} = 13.21V$$

$$V_{1(AC)} = 20.7V_{pp}$$

$$V_{2(AC)} = \left(\frac{9.2-j28.9}{(9.2-j28.9)+(2-+j314)}\right) \cdot 20.7V_{pp}$$

$$V_{2(AC)} = 2.1919V_{pp}$$

Green New Deal Bonus! Which of the following countries offer tuition-free college? (circle all that apply)

- $0/y Austria. Denmark, Germany, Hungary, Sweeden
- $700/y France
- $750/y: Spain
- $11,542/y NDSU (in-state)
- $23,000/y U. Minnesota (in-state)

ECE 320 - Final - Name _____

Part 2: Transistors and Op-Amps. Fall 2019

1) Transistors and Load Lines

Determine the following for the following transsitor circuit

Beta	Load Line	Operating Point for		
		a) Vin = 0V	b) Vin = 5V	c) Vin = 10V
40	show on graph	show on graph	show on graph	show on graph

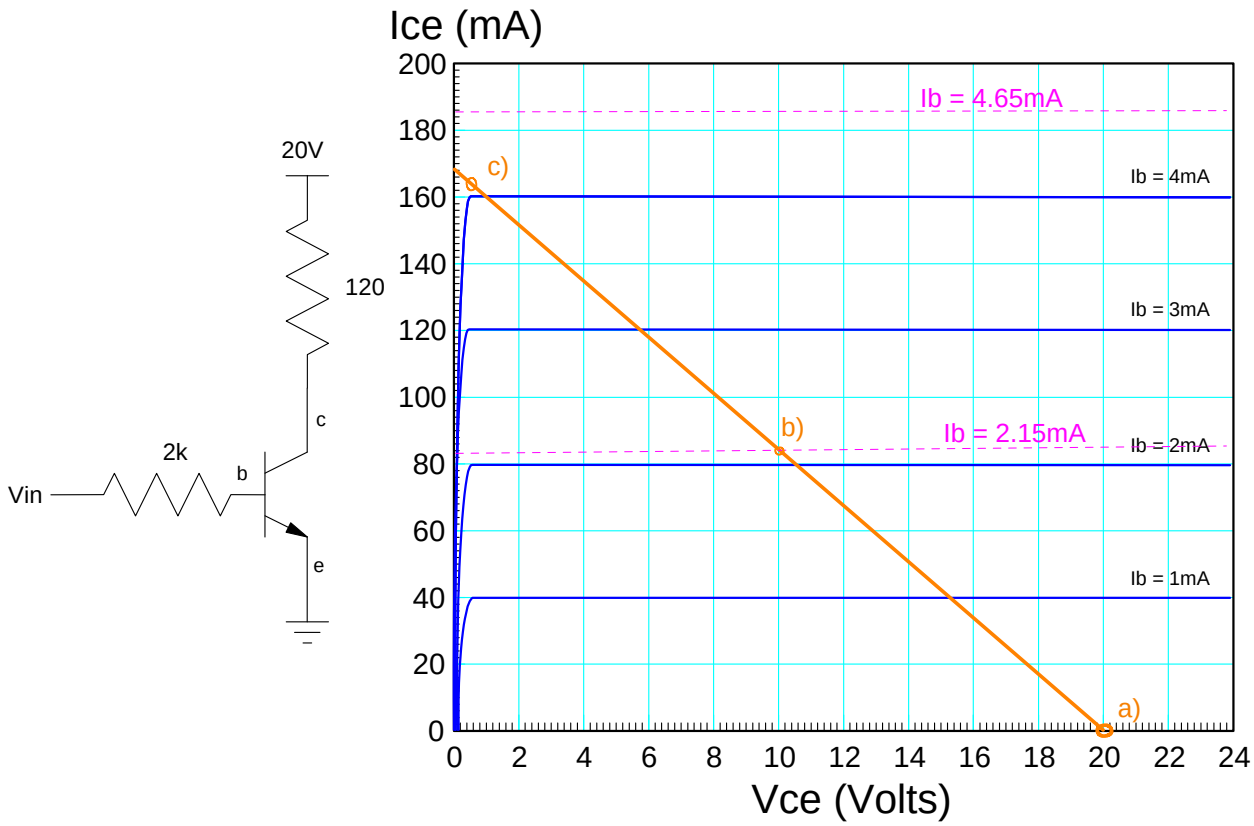

2) Transistor Switch. Determine Rc and Rb so that you can turn on and off a white LED at 2A. Assume

- Vf = 3.0V @ 4A for the LED
- The transistor has a gain of 500 ($\beta = 500$)
- Vbe = 0.7V, Vce(sat) = 0.2V
- Vin is capable of driving currents up to 10mA

Min value of Rb	Max value of Rb	Rc
430 Ohms	**1075 Ohms**	**3.9 Ohms**

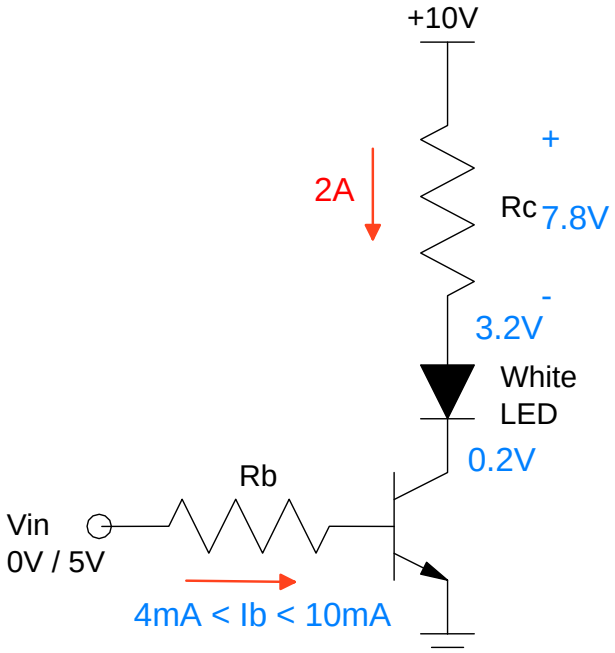

$$R_c = \left(\frac{10-3-0.2}{2A}\right) = \left(\frac{7.8V}{2A}\right) = 3.9\Omega$$

$$\beta I_b > I_c$$

$$I_b > \frac{2A}{500} = 4mA$$

At Ib = 4mA (min value of Ib)

$$R_b = \left(\frac{5V-0.7V}{4mA}\right) = 1075\Omega$$

At Ib = 10mA (max value of Ib)

$$R_b = \left(\frac{5V-0.7V}{10mA}\right) = 430\Omega$$

3) H-Bridge. Determine the voltages and currents for the following H-bridge. Assume all transistor have

- | Vbe | = 0.7V
- | Vce(sat) | = 0.2V
- β = 500

I1	I2	I3	V1	V2
970 uA	**192 mA**	**1.61 mA**	**9.8 V**	**0.2 V**

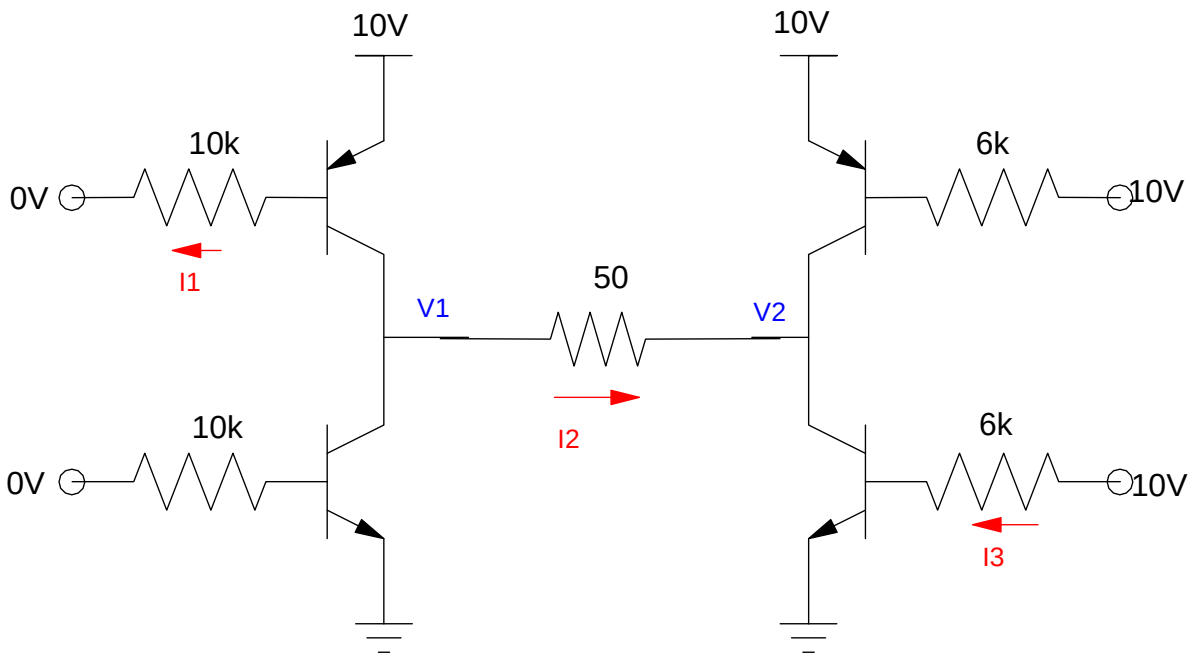

4) The data sheets for a Zetex 1051a NPN transistor are given below. From the data sheets, determine the following

max(Ic)	beta	Vbe	Vce(sat)
10A (inst) **4A (cont)**	**45 to 1200**	**0.92 V**	**17 mA** **75 mV** **165 mV**

PARAMETER	SYMBOL	MIN.	TYP.	MAX.	UNIT	CONDITIONS.
Collector-Base Breakdown Voltage	$V_{(BR)CBO}$	150	190		V	I_C=100µA
Collector-Emitter Breakdown Voltage	V_{CES}	150	190		V	IC=100µA
Collector-Emitter Breakdown Voltage	V_{CEO}	40	60		V	IC=10mA
Collector-Emitter Breakdown Voltage	V_{CEV}	150	190		V	IC=100µA, V_{EB}=1V
Emitter-Base Breakdown Voltage	$V_{(BR)EBO}$	5	8.8		V	I_E=100µA
Collector Cut-Off Current	I_{CBO}		0.3	10	nA	V_{CB}=120V
Emitter Cut-Off Current	I_{EBO}		0.3	10	nA	V_{EB}=4V
Collector Emitter Cut-Off Current	I_{CES}		0.3	10	nA	VCES=120V
Collector-Emitter Saturation Voltage	$V_{CE(sat)}$		17 75 165	25 110 210	mV mV mV	I_C=0.2A, I_B=10mA* I_C=1A, I_B=10mA* I_C=4A, I_B=100mA*
Base-Emitter Saturation Voltage	$V_{BE(sat)}$		920	1000	mV	I_C=4A, I_B=100mA*
Base-Emitter Turn-On Voltage	$V_{BE(on)}$		825	950	mV	IC=4A, V_{CE}=2V*
Static Forward Current Transfer Ratio	h_{FE}	290 300 190 45	440 450 310 70	1200		I_C=10mA, V_{CE}=2V* I_C=1A, V_{CE}=2V* I_C=4A, V_{CE}=2V* I_C=10A, V_{CE}=2V*
Transition Frequency	f_T		155		MHz	I_C=50mA, V_{CE}=10V f=100MHz
Output Capacitance	C_{obo}		27	40	pF	V_{CB}=10V, f=1MHz
Switching Times	t_{on}		100		ns	I_C=4A, I_B=40mA, V_{CC}=10V
	t_{off}		300		ns	I_C=4A, I_B=±40mA, V_{CC}=10V

5) Schmitt Trigger & Transistor Switch. Design a Schmitt trigger so that

- The motor turns on (500mA @ 20V) when R > 9k
- The motor turns off R < 8k
- No change for 8k < R < 9k

Assume

- The op-amp is capable of sourcing / sinking up to 20mA
- The transistor has a gain of 1000, Vbe = 1.4V, Vce = 0.9V (i.e. a TIP112 transistor)

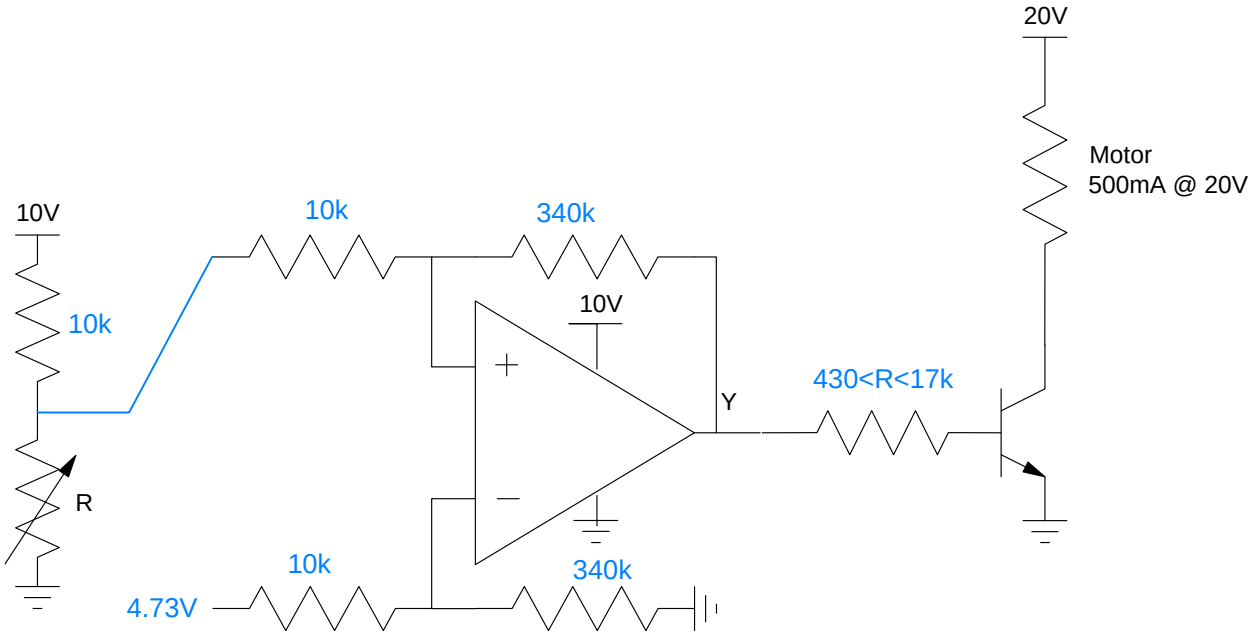

6) TTL Logic: Determine the voltages and currents for the following DTL gate. Assume 3904 transistors

- Vbe = 0.7V
- Vce(sat) = 0.2V
- β = 100

V1	V2	V3	I4	I5
1.7 V	**2.1 V**	**0.2 V**	**0 mA**	**2.9 mA**