ECE 320 - Homework #9

MOSFETs, MOSFET Switches, CMOS logic. Due Monday, October 28th

MOSFETs

1) The VI characteristics for an n-channel MOSFET is shown below. Assume Vt = 1.0V
   - Label the off / saturated / ohmic regions.
   - Determine the transconductance gain, kn

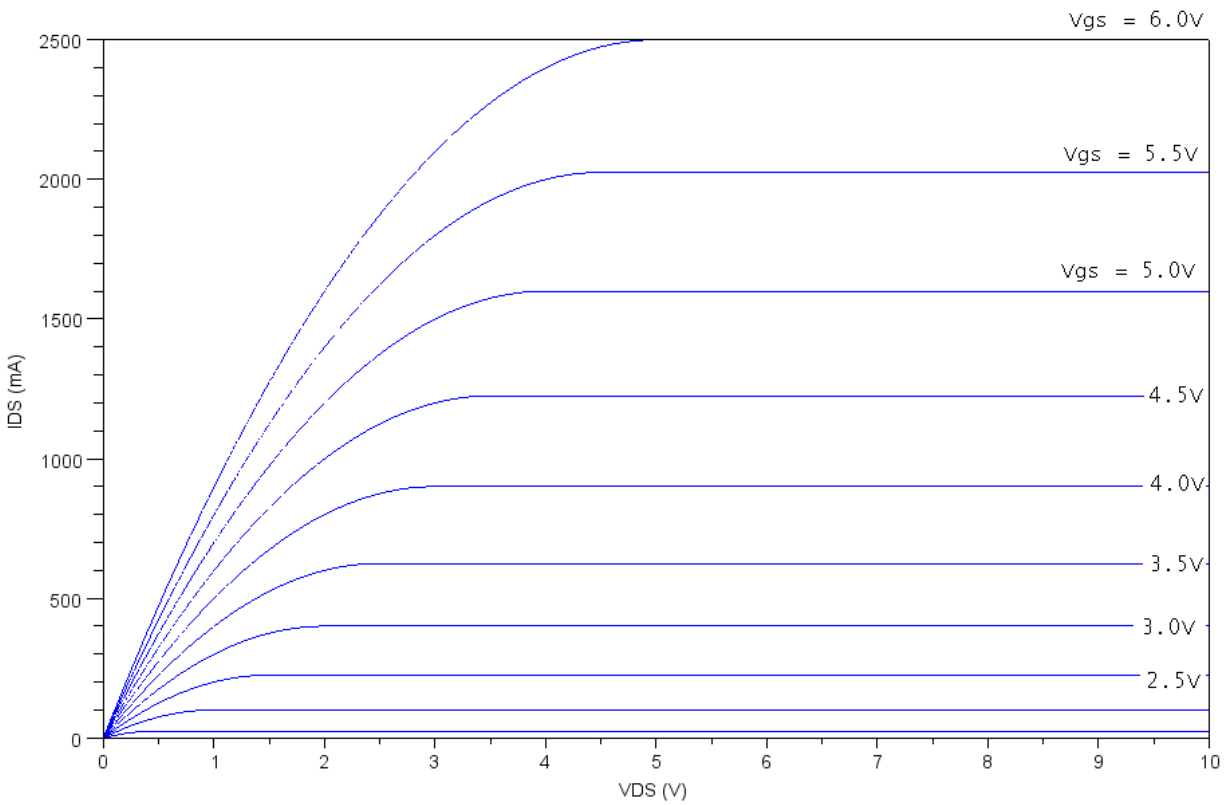

2) Draw the load line for the following circuit. Determine the Q-point (Vds, Ids) when
   - Vin = Vg = 0V
   - Vin = Vg = 5V
   - Vin = Vg = 10V

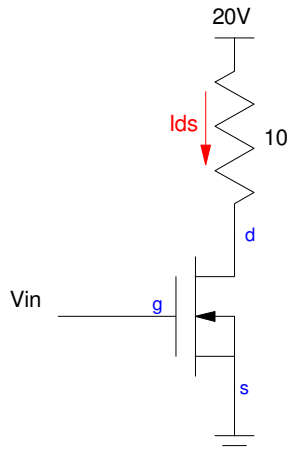

MOSFET Switch

The characteristics for a MOSFET are

- Part: AOTF296L
- Current - Continuous Drain (Id) @ 25°C 10A (Ta), 41A (Tc)
- Rds On (Max) @ Id, Vgs 10mOhm @ 20A, 10V
- Vgs(th) (Max) @ Id 3.4V @ 250µA

3) Determine the transconductance gain, kn

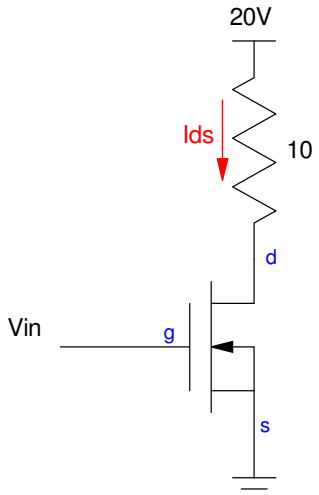

4) Determine the voltages for the following circuit for

- Vin = Vg = 0V
- Vin = Vg = 5V
- Vin = Vg = 10V

5) Design a circuit using this MOSFET to turn on and off a DC servo motor. Assume the DC motor draws 200mA @ 10V.

CMOS Logic

6) Design a CMOS gate to implement the function

$$Y = AB+A'BC$$