ECE 320 - Solution to Homework #1

EE 206 Review, Phasors. Due Wednesday, September 4th, 2019

1. Voltage Nodes:

a) Write the voltage node equations for the following circuit

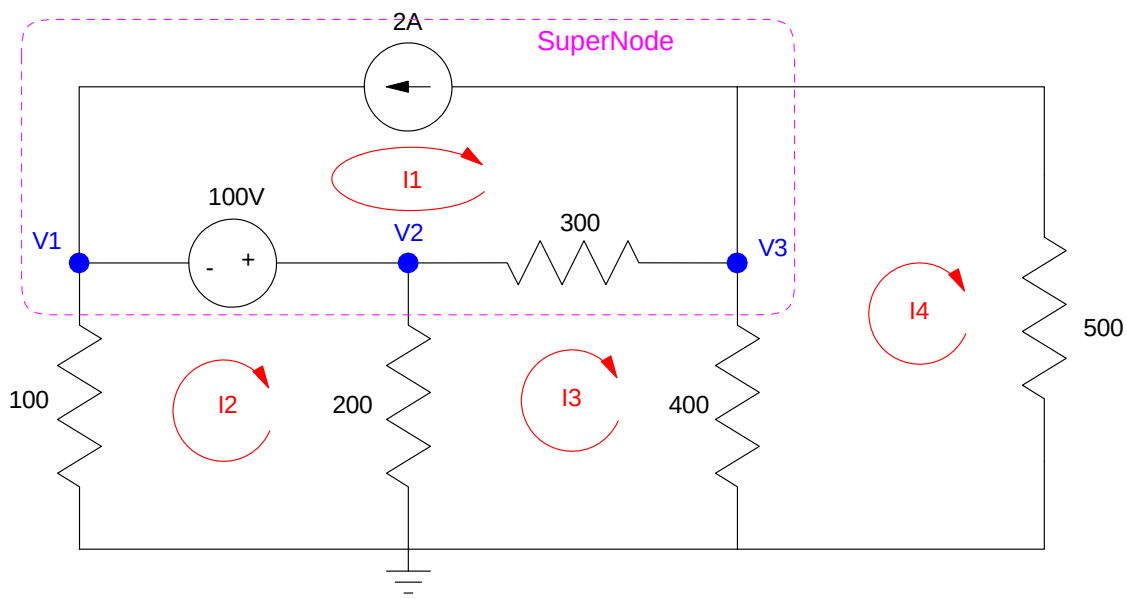

There are 3 voltage nodes - we need 3 equations to solve for 3 unknowns. Start with the easy one

$$V_2 - V_1 = 100$$

Now we need two more equations. Sum the current from each node to zero.

Node V3

$$2 + \left(\frac{V_3 - V_2}{300}\right) + \left(\frac{V_3}{400}\right) + \left(\frac{V_3}{500}\right) = 0$$

Super-Node (other supernodes also work)

$$\left(\frac{V_1}{100}\right) + \left(\frac{V_2}{200}\right) + \left(\frac{V_3}{400}\right) + \left(\frac{V_3}{500}\right) = 0$$

b) Solve using Matlab (or similar program)

Group terms

$$V_2 - V_1 = 100$$

$$\left(\frac{-1}{300}\right)V_2 + \left(\frac{1}{300} + \frac{1}{400} + \frac{1}{500}\right)V_3 = -2$$

$$\left(\frac{1}{100}\right)V_1 + \left(\frac{1}{200}\right)V_2 + \left(\frac{1}{400} + \frac{1}{500}\right)V_3 = 0$$

Place in matrix form

$$\begin{bmatrix} -1 & 1 & 0 \\ 0 & \left(\frac{-1}{300}\right) & \left(\frac{1}{300}+\frac{1}{400}+\frac{1}{500}\right) \\ \left(\frac{1}{100}\right) & \left(\frac{1}{200}\right) & \left(\frac{1}{400}+\frac{1}{500}\right) \end{bmatrix} \begin{bmatrix} V_1 \\ V_2 \\ V_3 \end{bmatrix} = \begin{bmatrix} 100 \\ -2 \\ 0 \end{bmatrix}$$

Solve

```
A = [-1,1,0 ; 0,-1/300,1/300+1/400+1/500 ; 1/100,1/200,1/400+1/500]

  - 1.       1.            0.
    0.     - 0.0033333     0.0078333
    0.01     0.005         0.0045

B = [100,-2,0]'

    100.
  - 2.
    0.

V = inv(A)*B

    27.044025
    127.04403
  - 201.25786
```

c) Check your answers in PartSim (or similar circuit simulator)

PartSim was down so I used CircuitLab. Note that the results are the same

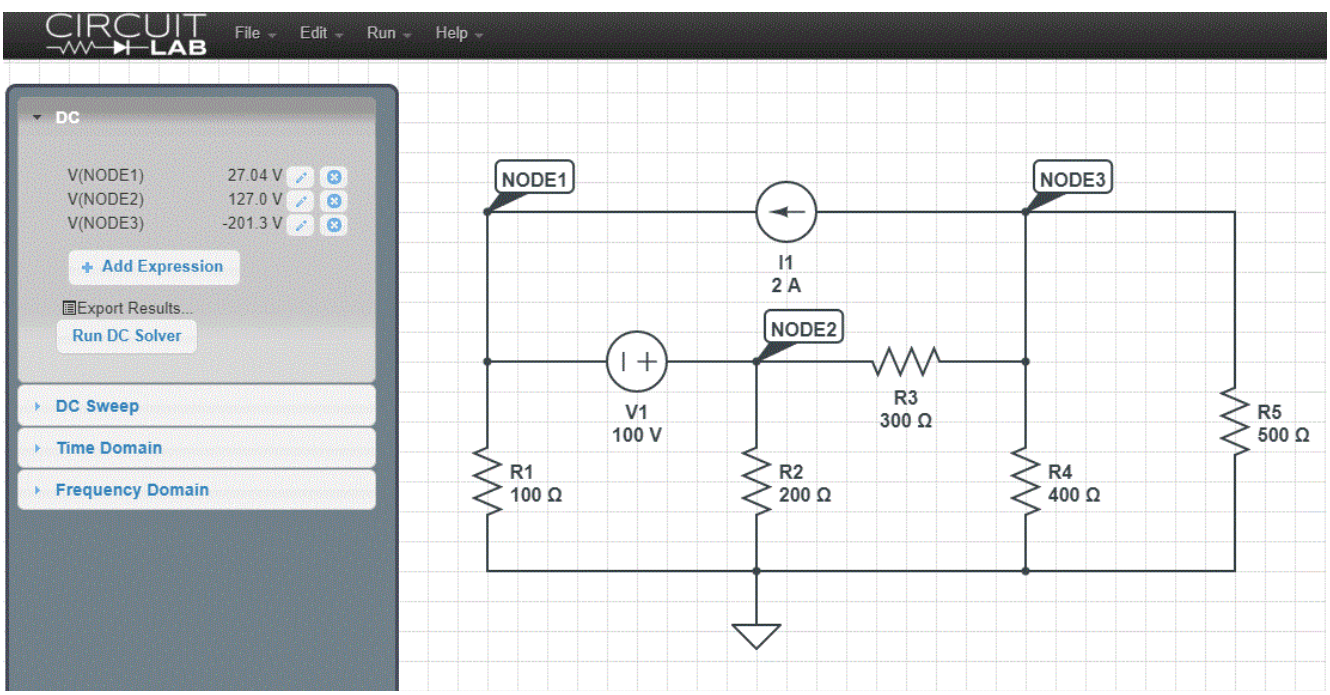

2. Current Loops:

a) Write the current loop equations for the following circuit

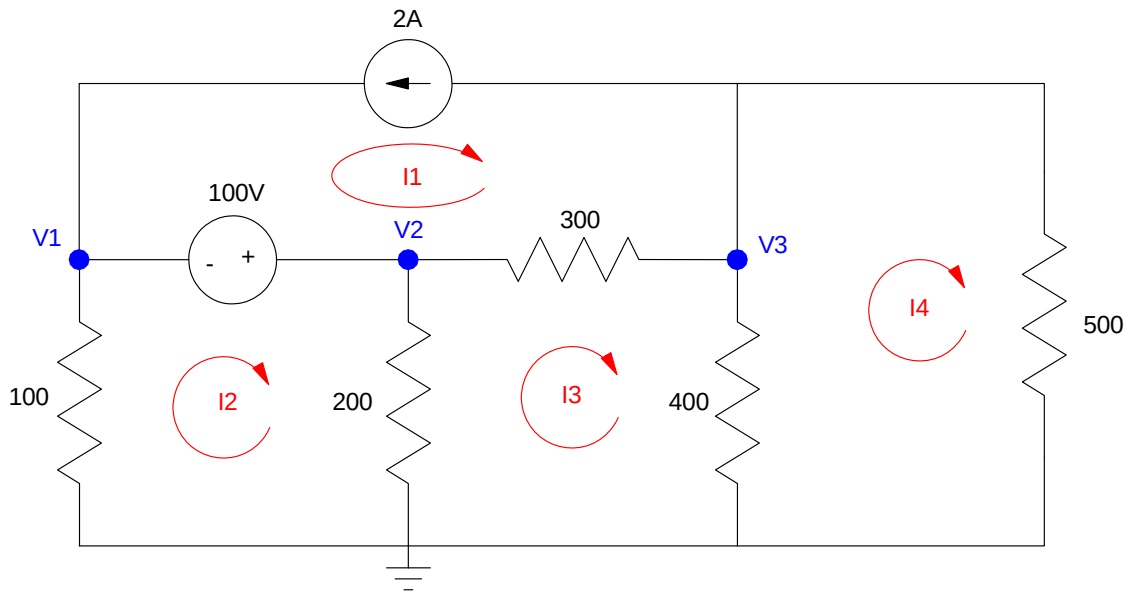

There are four current loops. We need 4 equations to solve for 4 unknowns. Start with the easy one

$$I_1 = -2$$

Now sum the voltages to zero around each loop to get the remaining 3 equations

$$100I_2 - 100 + 200(I_2 - I_3) = 0$$

$$200(I_3 - I_2) + 300(I_3 - I_1) + 400(I_3 - I_4) = 0$$

$$400(I_4 - I_3) + 500I_4 = 0$$

b) Solve using Matlab (or similar program)

Group terms

$$I_1 = -2$$

$$300I_2 - 200I_3 = 100$$

$$900I_3 - 200I_2 - 300I_1 - 400I_4 = 0$$

$$900I_4 - 400I_3 = 0$$

Place in matrix form

$$\begin{bmatrix} 1 & 0 & 0 & 0 \\ 0 & 300 & -200 & 0 \\ -300 & -200 & 900 & -400 \\ 0 & 0 & -400 & 900 \end{bmatrix} \begin{bmatrix} I_1 \\ I_2 \\ I_3 \\ I_4 \end{bmatrix} = \begin{bmatrix} -2 \\ 100 \\ 0 \\ 0 \end{bmatrix}$$

Solve in Matlab

```
A = [1,0,0,0 ; 0,300,-200,0 ; -300,-200,900,-400 ; 0,0,-400,900]

    1.      0.      0.      0.
    0.      300.  - 200.    0.
  - 300.  - 200.    900.  - 400.
    0.      0.    - 400.    900.

B = [-2,100,0,0]'

  - 2.
    100.
    0.
    0.

I = inv(A)*B

I1  -2.
I2  -0.2704403
I3  -0.9056604
I4  -0.4025157
```

To check your answers you need to do some computations

```
I2 = (0-V(1))/100

  -0.2704403


I4 = V(3)/500

  -0.4025157
```

The answer looks correct

3. Voltage Nodes:

a) Write the voltage node equations for the following circuit

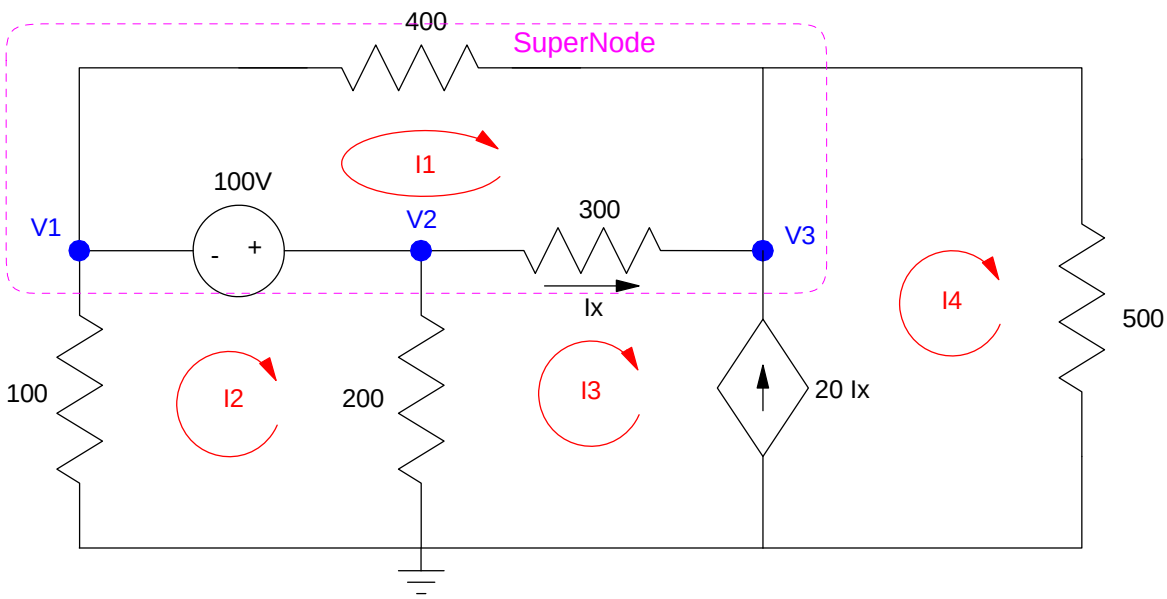

There are 3 voltage nodes plus one dependent source (Ix). We need 4 equations to solve for 4 unknowns.

$$I_x = \left(\frac{V_2 - V_3}{300}\right)$$

$$V_2 - V_1 = 100$$

$$-20I_x + \left(\frac{V_3 - V_2}{300}\right) + \left(\frac{V_3 - V_1}{400}\right) + \left(\frac{V_3}{500}\right) = 0$$

$$\left(\frac{V_1}{100}\right) + \left(\frac{V_2}{200}\right) - 20I_x + \left(\frac{V_3}{500}\right) = 0$$

b) Solve using Matlab (or similar program)

Group terms

$$\left(\frac{1}{300}\right)V_2 - \left(\frac{1}{300}\right)V_3 - I_x = 0$$

$$V_2 - V_1 = 100$$

$$-20I_x - \left(\frac{1}{300}\right)V_2 - \left(\frac{1}{400}\right)V_1 + \left(\frac{1}{300} + \frac{1}{400} + \frac{1}{500}\right)V_3 = 0$$

$$\left(\frac{1}{100}\right)V_1 + \left(\frac{1}{200}\right)V_2 - 20I_x + \left(\frac{1}{500}\right)V_3 = 0$$

Place in matrix form

$$\begin{bmatrix} 0 & \left(\frac{1}{300}\right) & \left(\frac{-1}{300}\right) & -1 \\ -1 & 1 & 0 & 0 \\ \left(\frac{-1}{400}\right) & \left(\frac{-1}{300}\right) & \left(\frac{1}{300}+\frac{1}{400}+\frac{1}{500}\right) & -20 \\ \left(\frac{1}{100}\right) & \left(\frac{1}{200}\right) & \left(\frac{1}{500}\right) & -20 \end{bmatrix} \begin{bmatrix} V_1 \\ V_2 \\ V_3 \\ I_x \end{bmatrix} = \begin{bmatrix} 0 \\ 100 \\ 0 \\ 0 \end{bmatrix}$$

Solve

```
A = [0,1/300,-1/300,-1 ; -1,1,0,0 ; -1/400,-1/300,1/300+1/400+1/500,-20 ;
1/100,1/200,1/500,-20]

    0.        0.0033333  - 0.0033333  - 1.
  - 1.        1.           0.           0.
  - 0.0025  - 0.0033333    0.0078333  - 20.
    0.01      0.005        0.002      - 20.

B = [0;100;0;0]

    0.
    100.
    0.
    0.

V = inv(A)*B
```

V1 -18.819188
V2 81.180812
V3 75.645756
Ix 0.018450

4. Current Loops:

a) Write the current loop equations for the following circuit

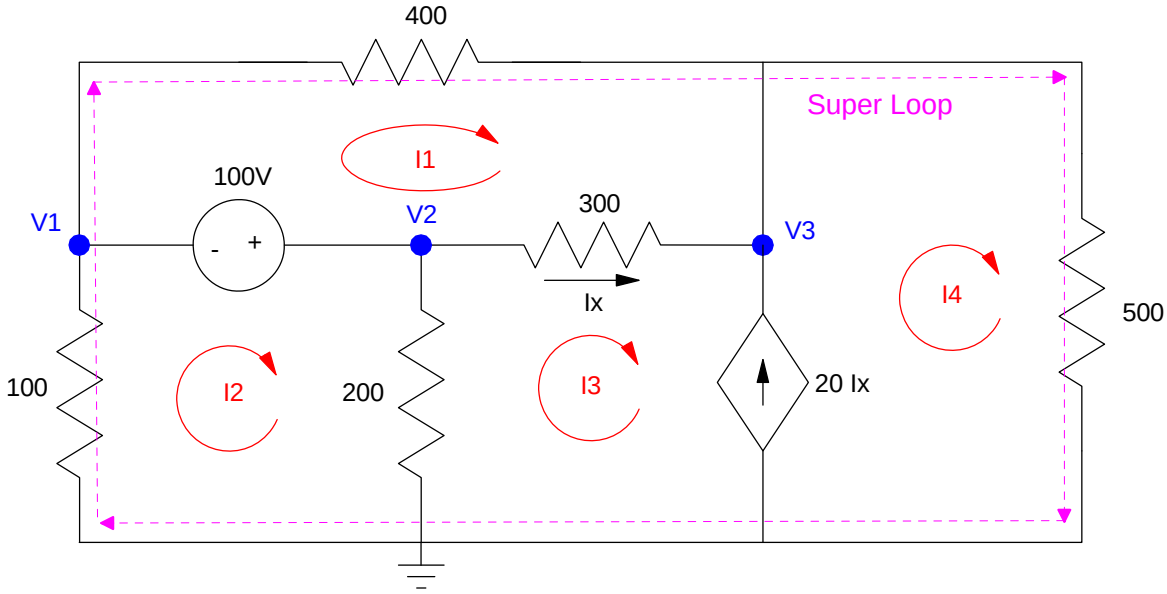

b) Solve using Matlab (or similar program)

There are 4 loops plus the dependent source (Ix). We need 5 equations to solve for 5 unknowns

$$I_x = I_3 - I_1$$

$$20I_x = I_4 - I_3$$

Sum the voltages to zero around 3 loops

$$100I_2 - 100 + 200(I_2 - I_3) = 0$$

$$400I_1 + 300(I_1 - I_3) + 100 = 0$$

$$100I_2 + 400I_1 + 500I_4 = 0$$

Group terms

$$I_x - I_3 + I_1 = 0$$

$$20I_x - I_4 + I_3 = 0$$

$$300I_2 - 200I_3 = 100$$

$$700I_1 - 300I_3 = -100$$

$$100I_2 + 400I_1 + 500I_4 = 0$$

Place in matrix form

$$\begin{bmatrix} 1 & 0 & -1 & 0 & 1 \\ 0 & 0 & 1 & -1 & 20 \\ 0 & 300 & -200 & 0 & 0 \\ 700 & 0 & -300 & 0 & 0 \\ 400 & 100 & 0 & 500 & 0 \end{bmatrix} \begin{bmatrix} I_1 \\ I_2 \\ I_3 \\ I_4 \\ I_x \end{bmatrix} = \begin{bmatrix} 0 \\ 0 \\ 100 \\ -100 \\ 0 \end{bmatrix}$$

Solve in Matlab

```
A = [1,0,-1,0,1 ; 0,0,1,-1,20 ; 0,300,-200,0,0 ; 700,0,-300,0,0 ; 400,100,0,500,0]

    1.      0.    - 1.      0.      1.
    0.      0.      1.    - 1.      20.
    0.      300.  - 200.    0.      0.
    700.    0.    - 300.    0.      0.
    400.    100.    0.      500.    0.

B = [0;0;100;-100;0]

    0.
    0.
    100.
  - 100.
    0.

I = inv(A)*B

I1  -0.2361624
I2   0.1881919
I3  -0.2177122
I4   0.1512915
Ix   0.0184502
```

5) Assume Vin contains a DC and 159Hz (1000 rad/sec) signal:

$$V_{in} = 10 + 3\sin(1000t)$$

a) Determine the impedances of the inductor, capacitor, and resistor at DC and 1000 rad/sec

b) Determine the voltage, V2, using phasor analysis

c) Check your answer using PartSim (or similar program)

DC Analysis

$$V_{in} = 10$$

Find the impedance of each element at DC:

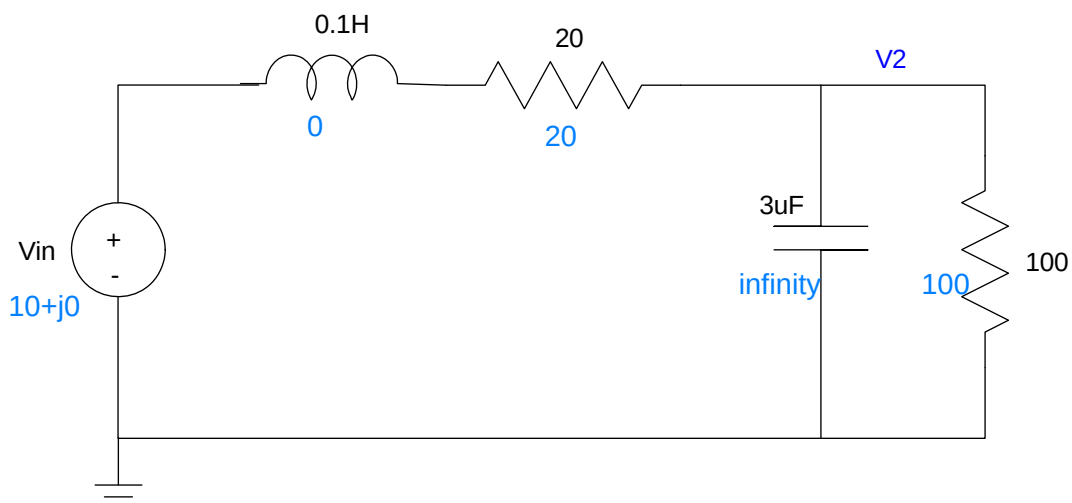

Solve:

$$100||\infty = 100$$

By voltage division

$$V_2 = \left(\frac{100}{100+20}\right) \cdot 10$$

$$V_2 = 8.333V$$

AC Analysis

$$V_{in} = 3\sin(1000t)$$

Convert to phasor notation

$$V_{in} = 0 - j3$$

$$L \rightarrow j\omega L = j100$$

$$C \rightarrow \frac{1}{j\omega C} = -j333.3$$

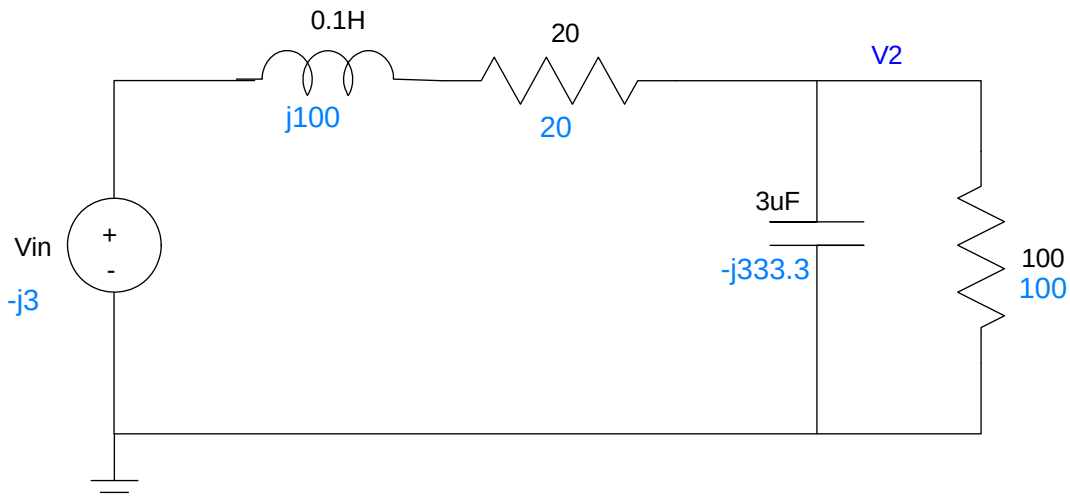

Solve

$$100 || -j333.3 = 91.74 - j27.52$$

By voltage division

$$V_2 = \left(\frac{(91.74 - j27.52)}{(91.74 - j27.52) + (20 + j100)}\right)(0 - j3)$$

$$V_2 = -1.64 - j1.39$$

This is phasor notation for

$$v_2(t) = -1.64\cos(1000t) + 1.39\sin(1000t)$$

The total answer is then DC plus AC

$$\boxed{v_2(t) = 8.333 - 1.64\cos(1000t) + 1.39\sin(1000t)}$$

Checking using CircuitLab (PartSim is still down...)

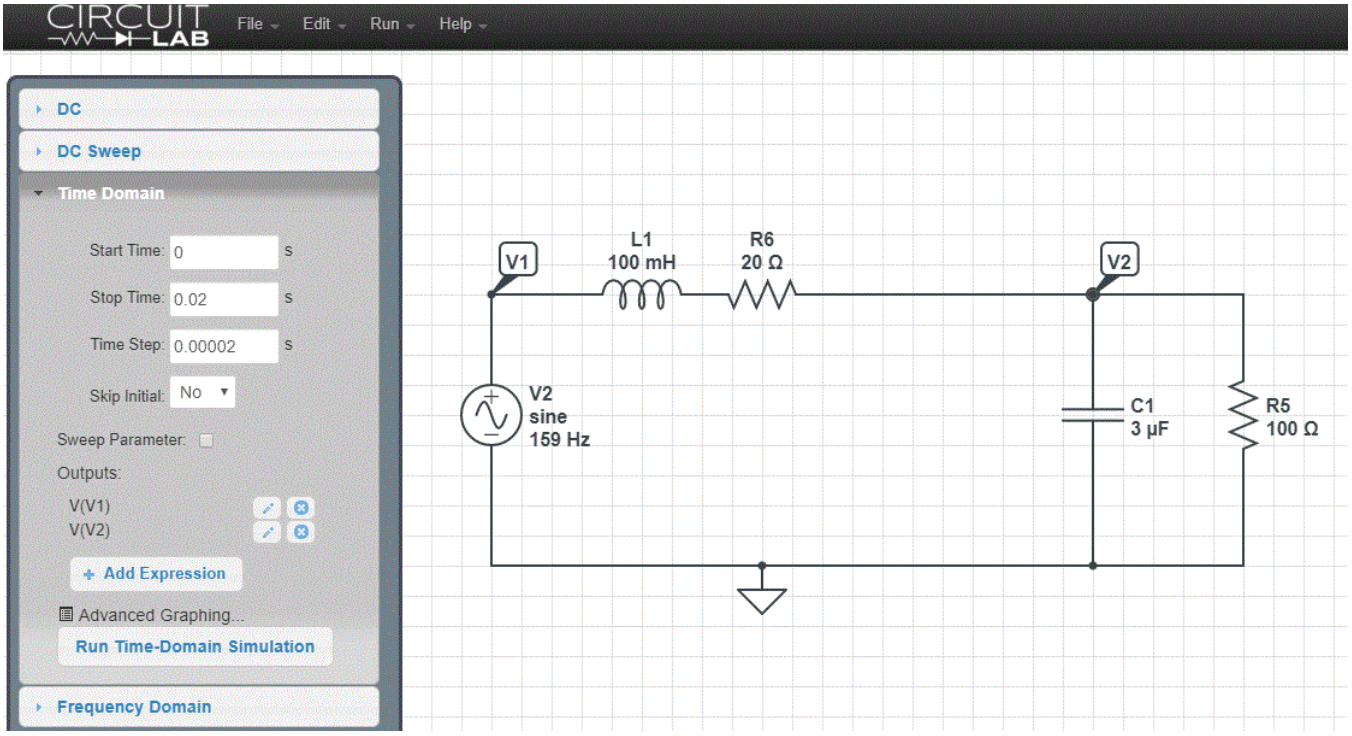

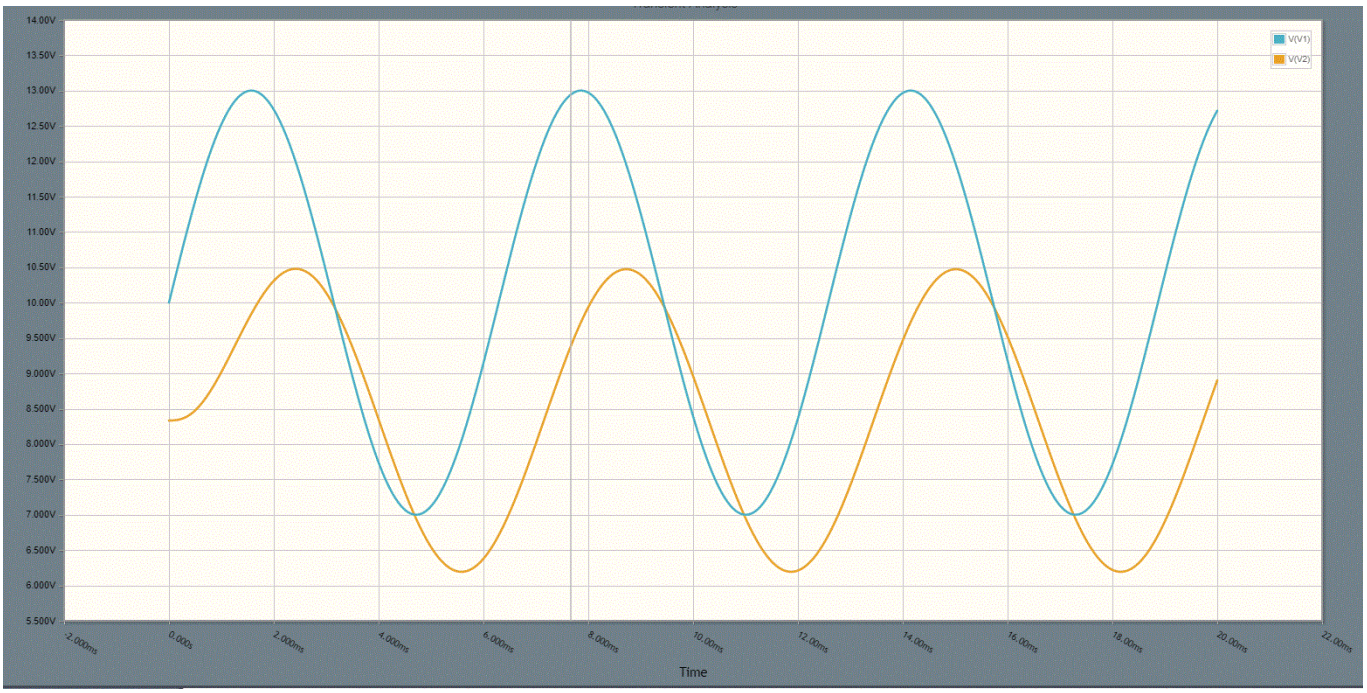

	V2pp	V2 (delay)	
Calculated	4.30 Vpp	-49.7 degrees	
Simulated	4.27 Vpp	-51 degrees	(0.9ms delay / 6.3ms period)