ECE 320 - Homework #3

Diodes, Ideal Diodes, LEDs. Due Monday, September 16th

1) Assume the VI characteristics for a diode are

$$V_d = 0.052 \ln\left(\frac{I_{dss}}{10^{-8}} + 1\right) \qquad I_d = 10^{-8}\left(\exp\left(\frac{V_d}{0.052}\right) - 1\right)$$

For the circuit below on the left

- Write the votlage node equations
- Solve for V1 (probably using *fminsearch* in Matlab)

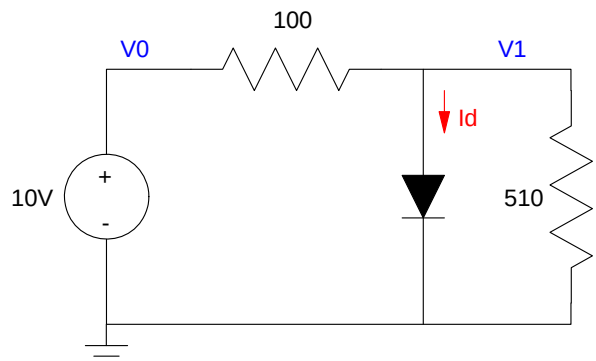

Equations:

$$I_d = 10^{-8}\left(\exp\left(\frac{V_1}{0.052}\right) - 1\right)$$

$$\left(\frac{V_1 - 10}{100}\right) + I_d + \left(\frac{V_1}{510}\right) = 0$$

Solve in SciLab (my license for Matlab isn't working at the moment)

```
function J = cost(z)
   V1 = z;
   Id = 1e-8 * (exp(V1/0.052)-1);
   e = (V1-10)/100 + Id + (V1/510);
   J = e^2;
endfunction

[a,b] = leastsq(cost,1)
 b  =    0.8326856
 a  =   1.286D-38
```

2) Check your results in CircuitLab (or similar program)

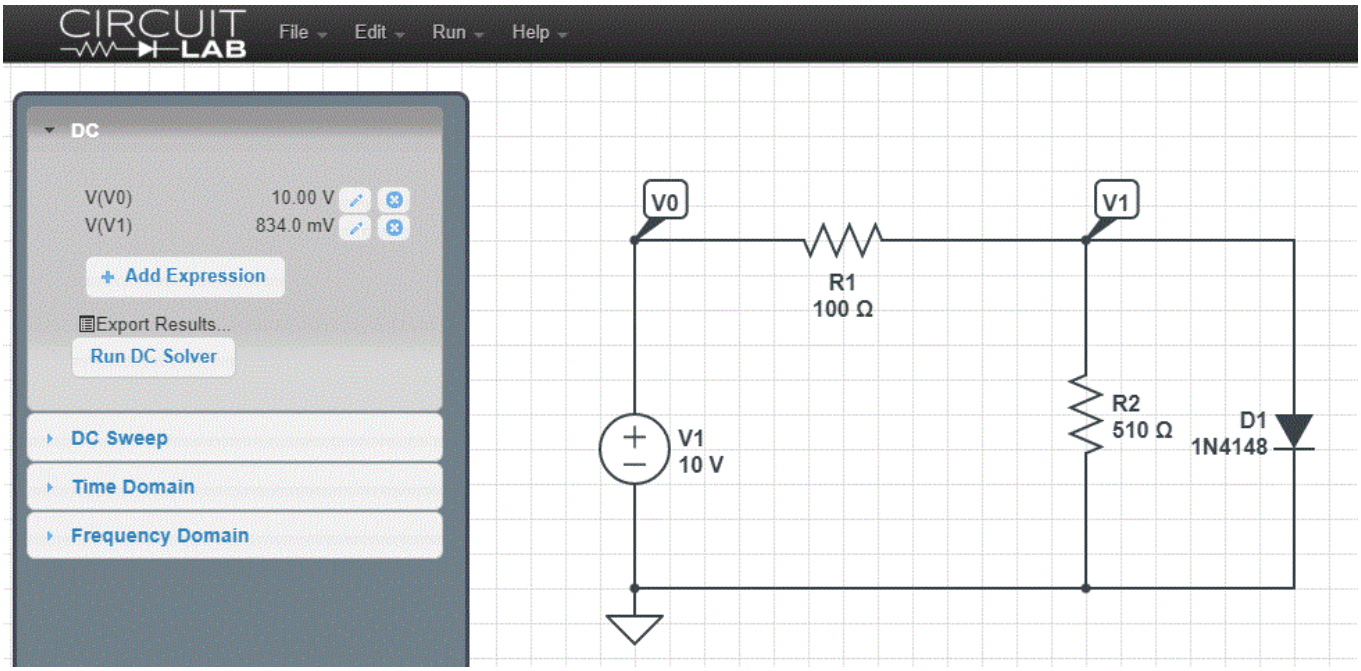

3) Assume an ideal silicon diode (Vf = 0.7V). Determine the voltages and currents

$$V_1 = 0.7V$$

$$I_d + \left(\frac{V_1}{510}\right) + \left(\frac{V_1 - 10}{100}\right) = 0$$

$$I_d = 91.63mA$$

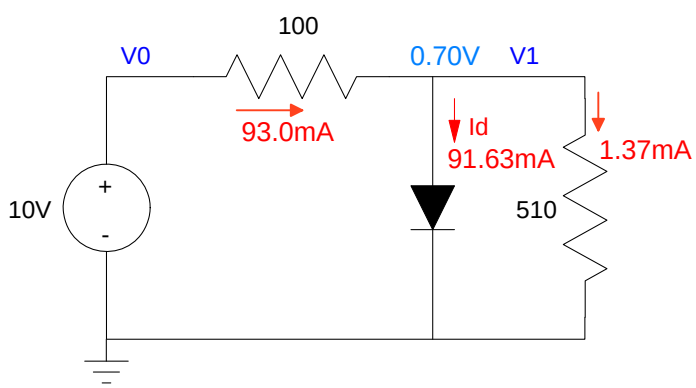

	Calculations problem 1	Simulation problem 2	Ideal Diode problem 3	Lab problem 7
V1	0.83268 V	0.8340 V	0.7 V	0.7915 V
Id	90.04 mA	90.02 mA	91.63 mA	

4) For the circuit below on the right

- Write the votlage node equations assuming non-ideal diodes (exponential VI relationship)
- Solve for V1, V2, and V3 (probably using *fminsearch* in Matlab)

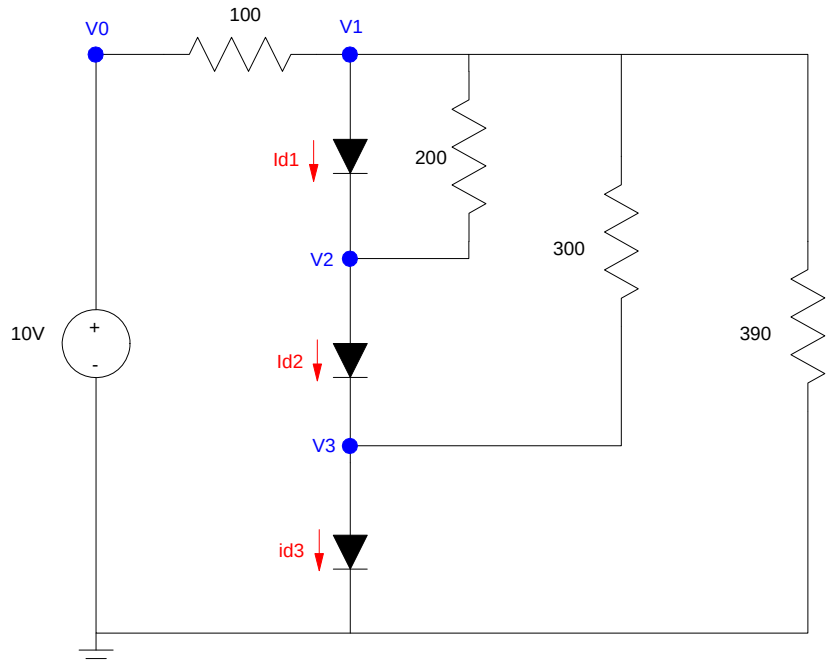

Start with the diode equations

$$I_{d1} = 10^{-8}\left(\exp\left(\frac{V_1 - V_2}{0.052}\right) - 1\right)$$

$$I_{d2} = 10^{-8}\left(\exp\left(\frac{V_2 - V_3}{0.052}\right) - 1\right)$$

$$I_{d3} = 10^{-8}\left(\exp\left(\frac{V_3}{0.052}\right) - 1\right)$$

Now write the voltage node equations

$$\left(\frac{V_1 - 10}{100}\right) + I_{d1} + \left(\frac{V_1 - V_2}{200}\right) + \left(\frac{V_1 - V_3}{300}\right) + \left(\frac{V_1}{390}\right) = 0$$

$$-I_{d1} + I_{d2} + \left(\frac{V_2 - V_1}{200}\right) = 0$$

$$-I_{d2} + I_{d3} + \left(\frac{V_3 - V_1}{300}\right) = 0$$

Solve in SciLab (again, Matlab isn't working for me right now...)

```
function J = cost(z)

   V1 = z(1);
   V2 = z(2);
   V3 = z(3);

   Id1 = 1e-8 * (exp((V1-V2)/0.052)-1);
   Id2 = 1e-8 * (exp((V2-V3)/0.052)-1);
   Id3 = 1e-8 * (exp(V3/0.052)-1);

   e1 = (V1-10)/100 + Id1 + (V1-V2)/200 + (V1-V3)/300 + V1/390;
   e2 = -Id1 + Id2 + (V2-V1)/200;
   e3 = -Id2 + Id3 + (V3-V1)/300;

   J = e1^2 + e2^2 + e3^2;

endfunction


[a,b] = leastsq(cost,[2.1,1.4,0.7])

 b  =    2.4452763    1.6338721    0.8190544

 a  =    6.409D-27
```

Result:

```
V1 =     2.4452763
V2 =     1.6338721
V3 =     0.8190544
```

5) Check your results using Circuit Lab (or similar program)

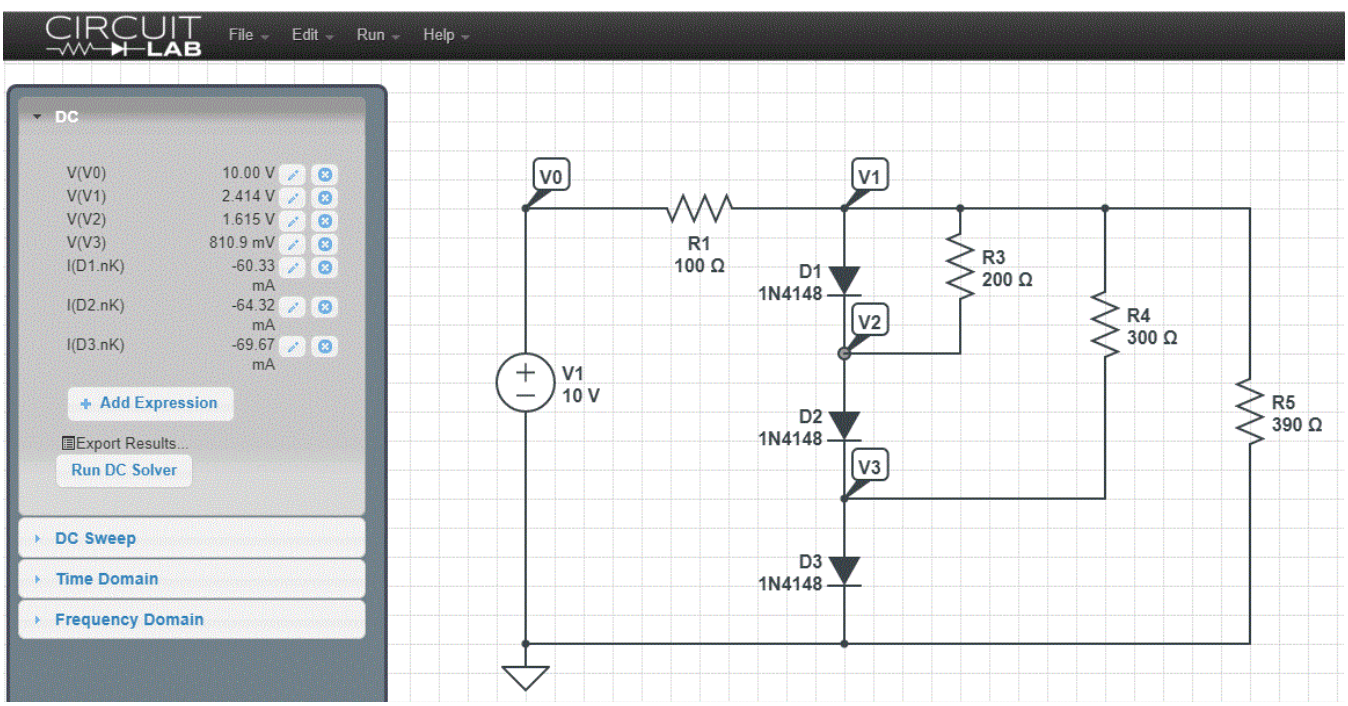

6) Assume an ideal silicons diode (Vf = 0.7V). Determine the voltages and currents

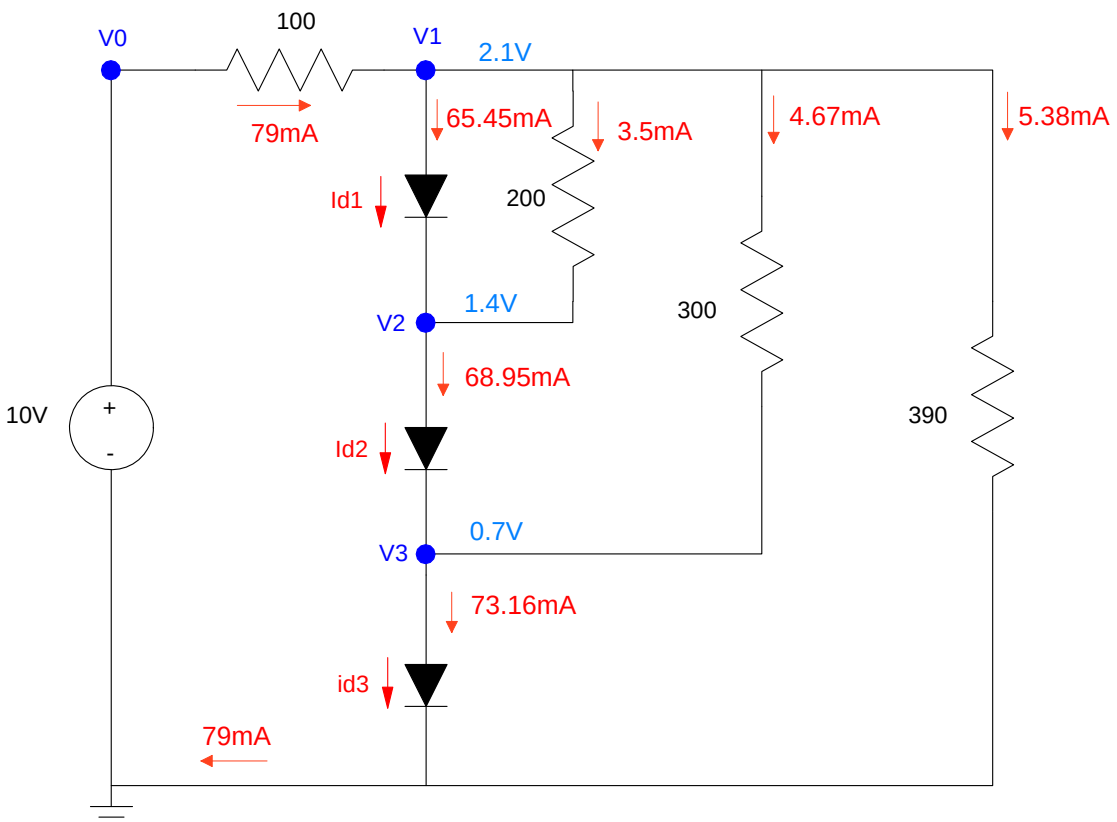

	Calculated problem 4	Simulated problem 5	Ideal Diode problem 6	Lab problem 7
V1	2.4452763 V	2.414 V	2.1 V	2.31 V
V2	1.6338721 V	1.615 V	1.4 V	1.53 V
V3	0.8190544 V	0.8109 V	0.7 V	0.77 V

7) Lab: Build both of these circuits in lab and measure the voltages. Do they match your computation and simulation results?

LEDs

The specifications for a Piranah RGB LED are

Color	Vf @ 20mA	mcd @ 20mA
red	2.0V	10,000
green	3.2V	10,000
blue	3.2V	10,000

8) Design a circuit to drive these LEDs with a 10V source to produce hot pink:

- Red = 9450 mcd (241/255)
- Green = 549 mcd (14/255)
- Blue = 7960 mcd (203/255)

Red

$$I_r = \left(\frac{9450mcd}{10{,}000mcd}\right)20mA = 18.90mA$$

$$R_r = \left(\frac{5V–2.0V}{18.90mA}\right) = 159\Omega$$

Green

$$I_g = \left(\frac{549mcd}{10{,}000mcd}\right)20mA = 1.098mA$$

$$R_g = \left(\frac{5V–3.2V}{1.098mA}\right) = 1639\Omega$$

Blue

$$I_g = \left(\frac{7960mcd}{10{,}000mcd}\right)20mA = 15.92mA$$

$$R_g = \left(\frac{5V–3.2V}{15.92mA}\right) = 113\Omega$$

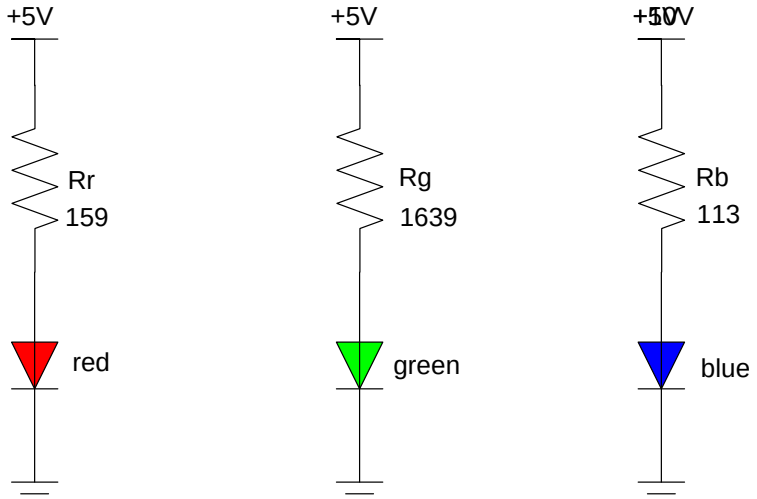

9) Design a circuit to drive these LEDs with a 10V source producing leaf green:

- Red = 7529 mcd (192/255)
- Green = 9450 mcd (241/255)
- Blue = 705 mcd (18/255)

Just change the resistors

Red

$$I_r = \left(\frac{7529mcd}{10{,}000mcd}\right)20mA = 15.06mA$$

$$R_r = \left(\frac{5V-2.0V}{15.06mA}\right) = 199\Omega$$

Green

$$I_g = \left(\frac{9450mcd}{10{,}000mcd}\right)20mA = 18.90mA$$

$$R_g = \left(\frac{5V-3.2V}{18.90mA}\right) = 95\Omega$$

Blue

$$I_b = \left(\frac{705mcd}{10{,}000mcd}\right)20mA = 1.41mA$$

$$R_b = \left(\frac{5V-3.2V}{1.41mA}\right) = 1275\Omega$$