ECE 320 - Homework #9

MOSFETs, MOSFET Switches, CMOS logic. Due Monday, October 28th

MOSFETs

1) The VI characteristics for an n-channel MOSFET is shown below. Assume Vt = 1.0V
   - Label the off / saturated / ohmic regions.
   - Determine the transconductance gain, kn

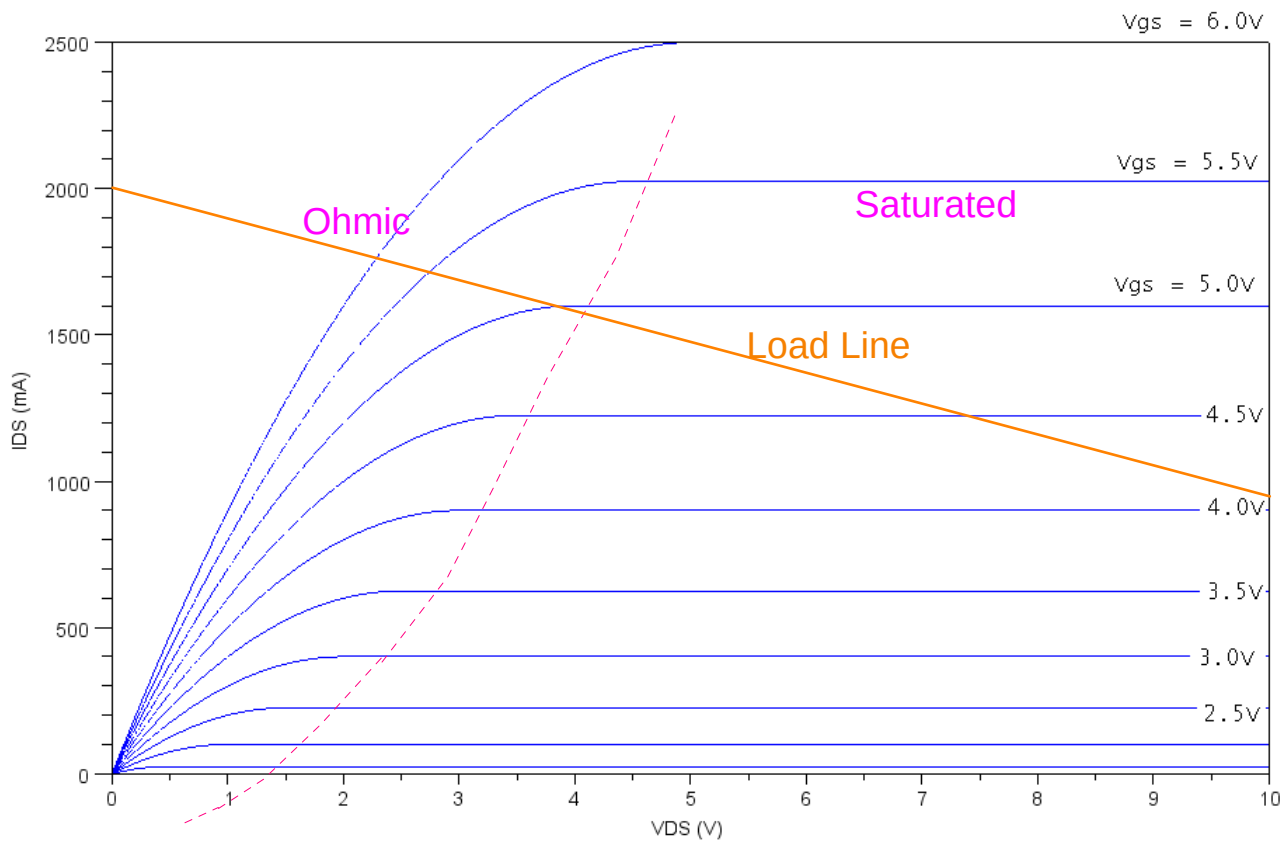

$$2.5A = \frac{k_n}{2}(6-1)^2$$

$$k_n = 0.2\ \frac{A}{V^2}$$

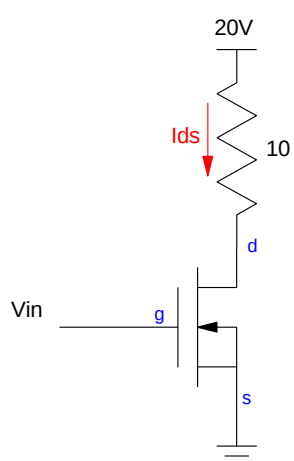

2) Draw the load line for the following circuit. Determine the Q-point (Vds, Ids) when

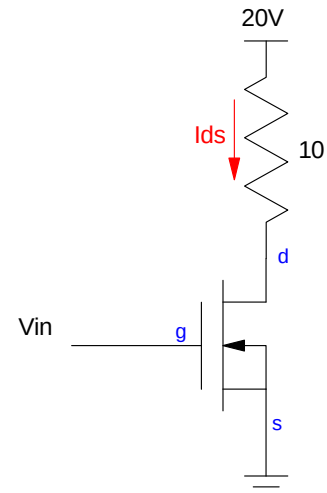

Vin = Vg = 0V

Off region

Ids = 0V

Vde = 20V

Vin = Vg = 5V

Saturated Region

$$I_{ds} = \frac{k_n}{2}(V_{gs} - V_{th})^2$$

$$I_{ds} = \left(\frac{0.2}{2}\right)(5-1)^2$$

$$I_{ds} = 1.6A$$

$$V_{ds} = 20 - 10I_{ds} = 4.0V$$

Vin = Vg = 10V

Ohmic Region

$$I_{ds} = k_n\left(V_{gs} - V_{th} - \frac{V_{ds}}{2}\right)V_{ds}$$ 1st equation

$$10I_{ds} + V_{ds} = 20$$ 2nd equation - load line

Solution

Ids = 1.8888 A

Vds = 1.118 V

MOSFET Switch

The characteristics for a MOSFET are

- Part: AOTF296L
- Current - Continuous Drain (Id) @ 25°C 10A (Ta), 41A (Tc)
- **Rds On (Max) @ Id, Vgs 10mOhm @ 20A, 10V**
- Vgs(th) (Max) @ Id 3.4V @ 250µA

3) Determine the transconductance gain, kn

In the Ohmic region

$$V_{ds} = 0.01\Omega \cdot 20A = 0.2V$$

$$I_{ds} = k_n\left(V_{gs} - V_{th} - \frac{V_{ds}}{2}\right)V_{ds}$$

$$20A = k_n\left(10V - 3.4V - \frac{0.2V}{2}\right)0.2V$$

$$k_n = 15.38\ \frac{A}{V^2}$$

4) Determine the voltages for the following circuit for

Vin = Vg = 0V

Off region

Ids = 0

Vds = 20V

Vin = Vg = 5V

assume ohmic region

$$I_{ds} = \frac{k_n}{2}(V_{gs} - V_{th})^2$$

$$I_{ds} = \frac{15.38}{2}(5 - 3.4)^2$$

$$I_{ds} = 19.68A$$

not possible. So, assume ohmic region

$$I_{ds} = k_n\left(V_{gs} - V_{th} - \frac{V_{ds}}{2}\right)V_{ds}$$

$$I_{ds} = 15.38\left(5 - 3.4 - \frac{V_{ds}}{2}\right)V_{ds}$$

$$10I_{ds} + V_{ds} = 20$$

solving

Ids = 1.992V

Vds = 0.083V

Rds = Vds / Ids = 0.042 Ohms

Vin = Vg = 10V

assume Ohmic region

$$I_{ds} = 15.38\left(10 - 3.4 - \frac{V_{ds}}{2}\right)V_{ds}$$

$$10I_{ds} + V_{ds} = 20$$

Solving

Ids = 1.998 A

Vds = 0.020 V

Rds = Vds / Ids = 0.010 Ohms

5) Design a circuit using this MOSFET to turn on and off a DC servo motor. Assume the DC motor draws 200mA @ 10V.

Use the previous MOSFET.

- Apply Vin = 0V to turn off
- Apply Vin = 10V (or 5V) to turn on

MOSFET switches are really easy to use

CMOS Logic

6) Design a CMOS gate to implement the function

Y = AB+A'BC

Use DeMorgan's Theorem

$$Y = AB + \overline{A}BC$$

$$\overline{Y} = \left(\overline{A} + \overline{B}\right)\left(A + \overline{B} + \overline{C}\right)$$

On the low side, implement Y'

On the high side, imlpement Y