ECE 320 - Final (part 1) - Name _____

Semiconductors and Diode Circuits

1) Load Lines (diode). Draw the load line and determine Vd and Id for the following diode circuit

Load Line	Q-Point (Vd)	Q-Point (Id)
show on graph		

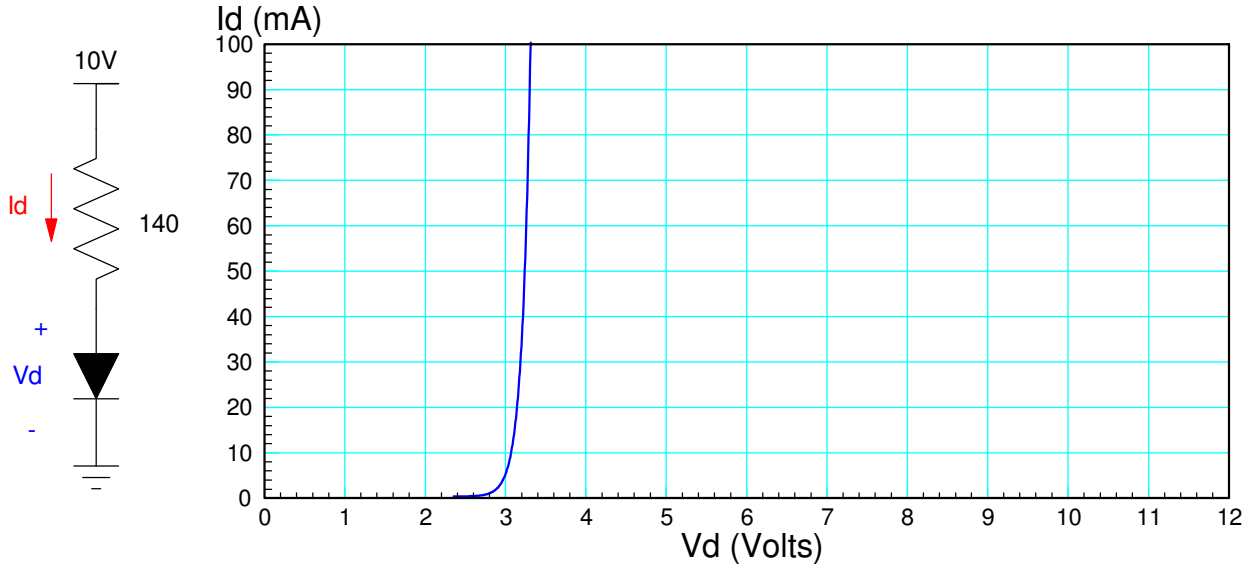

2) Diode Circuits (nonlinear equations). Write the voltage node equations for the following diode circuit. Assume non-ideal diodes with

$$V_d = 0.052 \ln(10^8 I_d + 1) \qquad I_d = 10^{-8}\left(\exp\left(\frac{V_d}{0.052}\right) - 1\right)$$

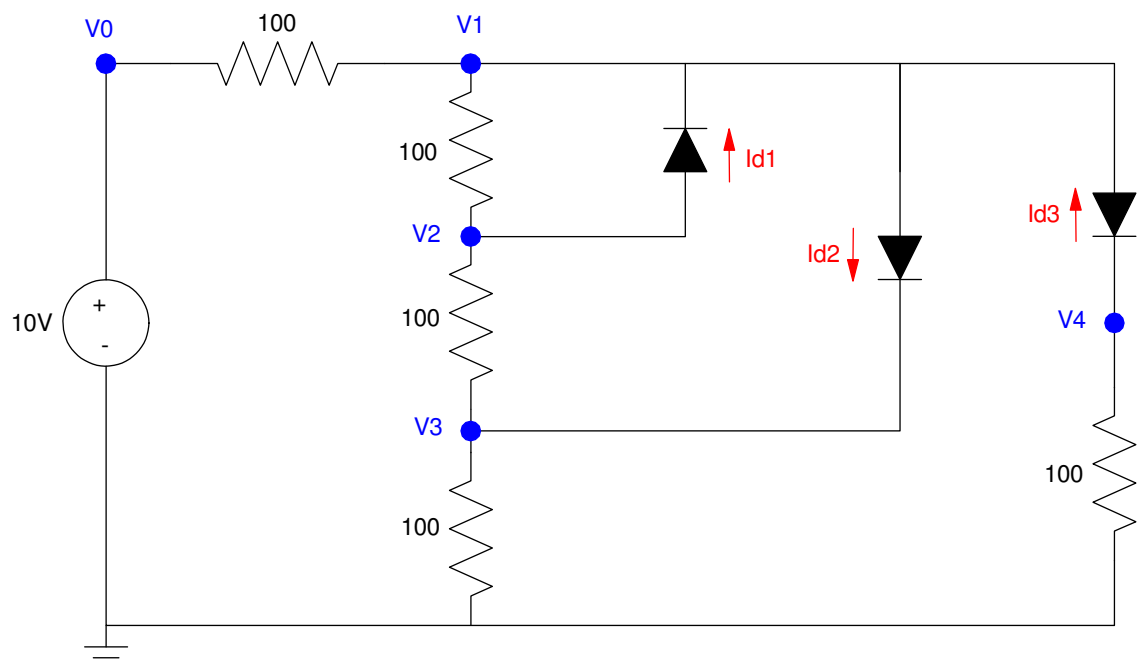

3) Assuming ideal silicon diodes (Vf = 0.7V), determine the voltages and currents

V1	V2	V3	Id1	Id2	Id3

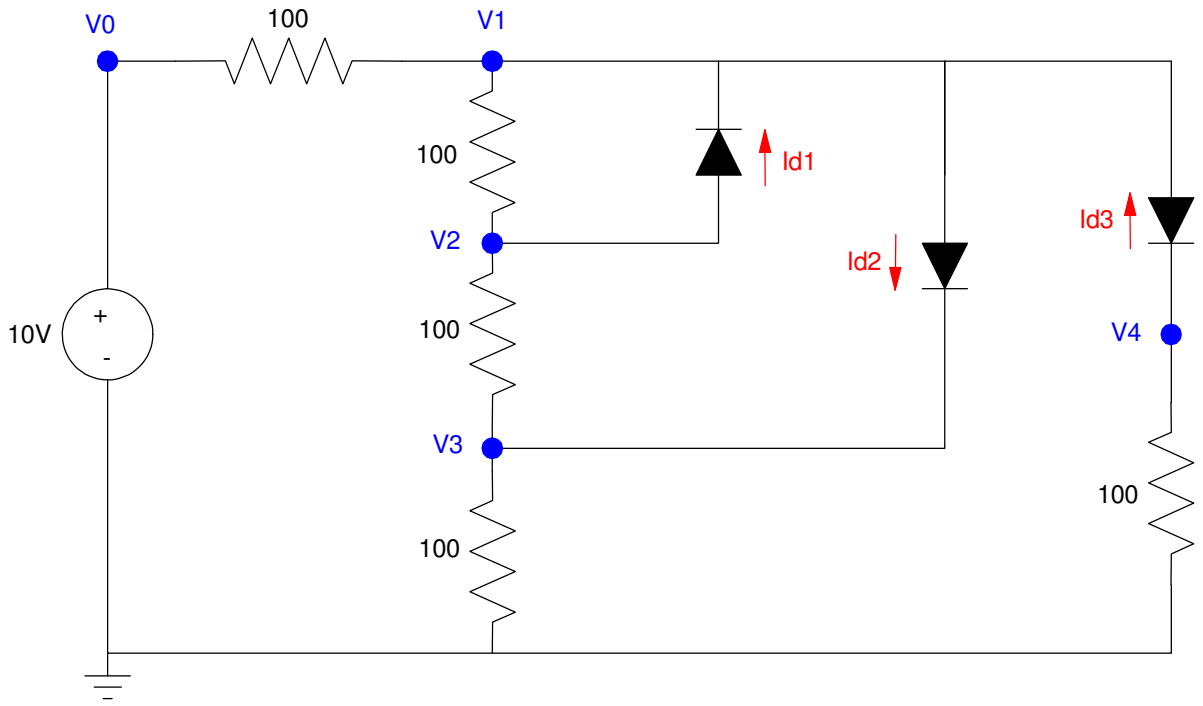

4) AC to DC converter: Determine the voltages (DC and AC) for the following DC to AC converter. Assume ideal silicon diodes (Vf = 0.7V)

V1		V2	
V1(DC)	Vpp (AC)	V2(DC)	V2pp (AC)

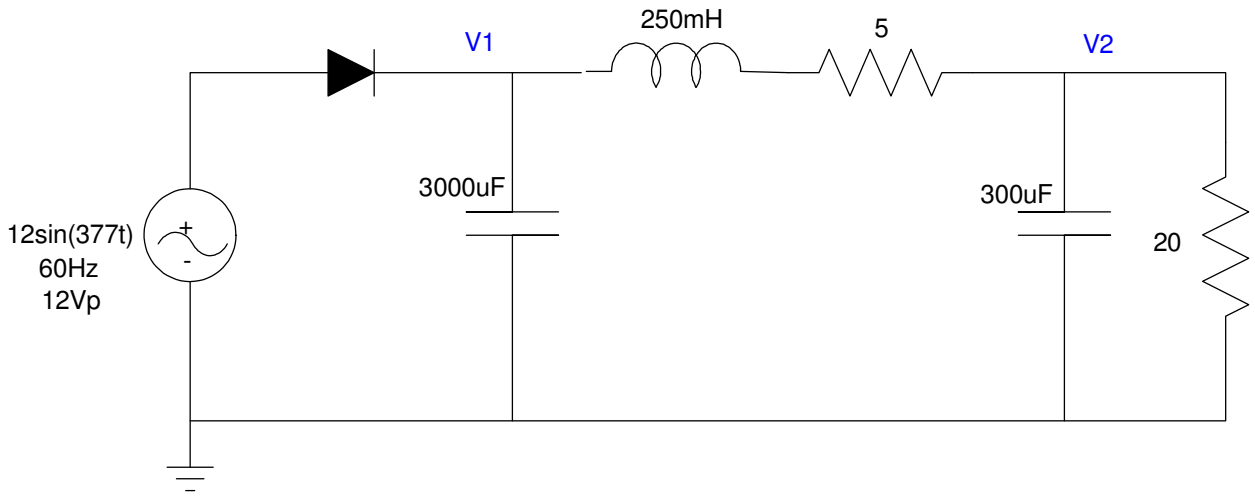

5) Max/Min: Determine the currents for the following max/min circuit. Assume ideal silicon diodes.

I1	I2	I3	I4	I5	I6

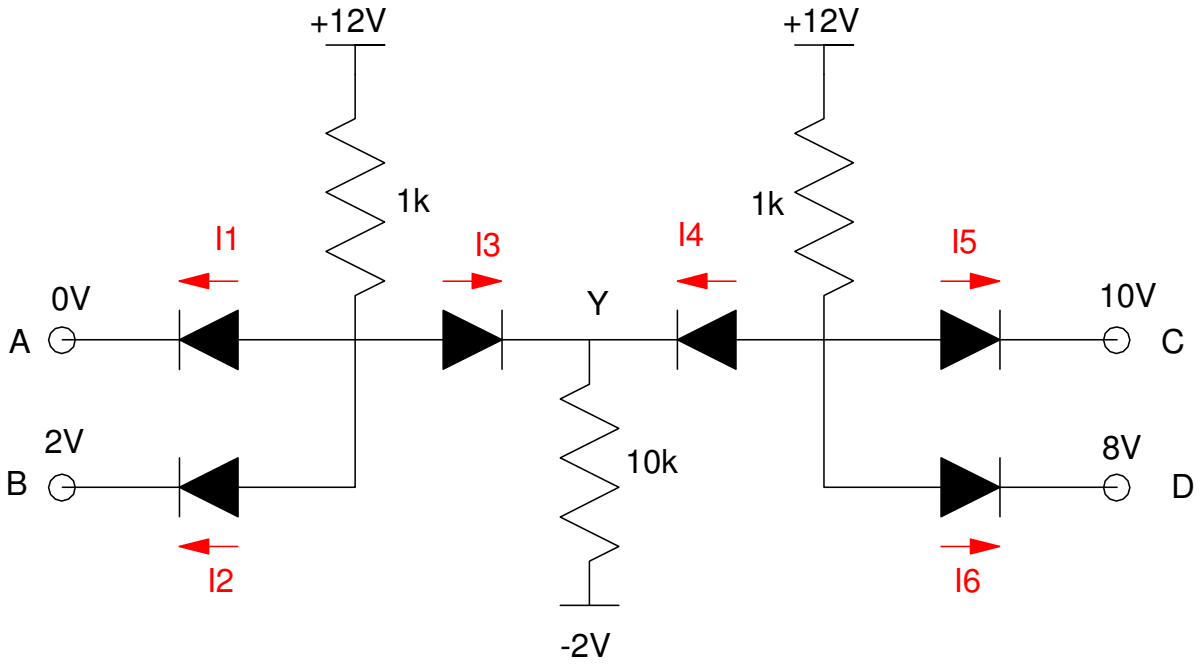

6) Clipper Circuits: Determine the resitances and zener votlages to implement the following function

R0	R1	Vz1	R2	Vz2

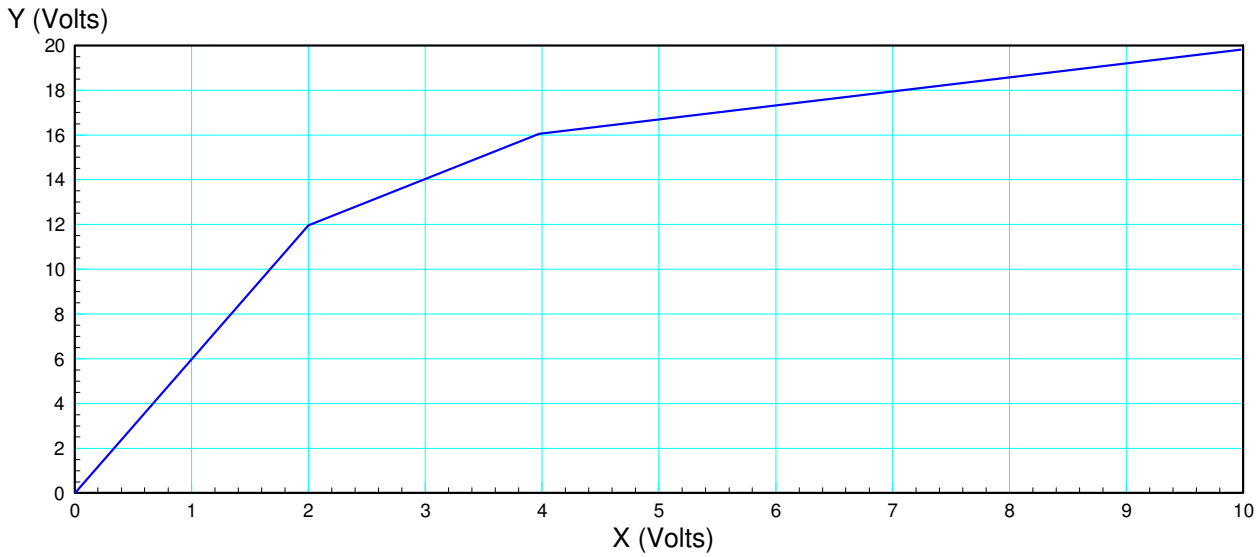

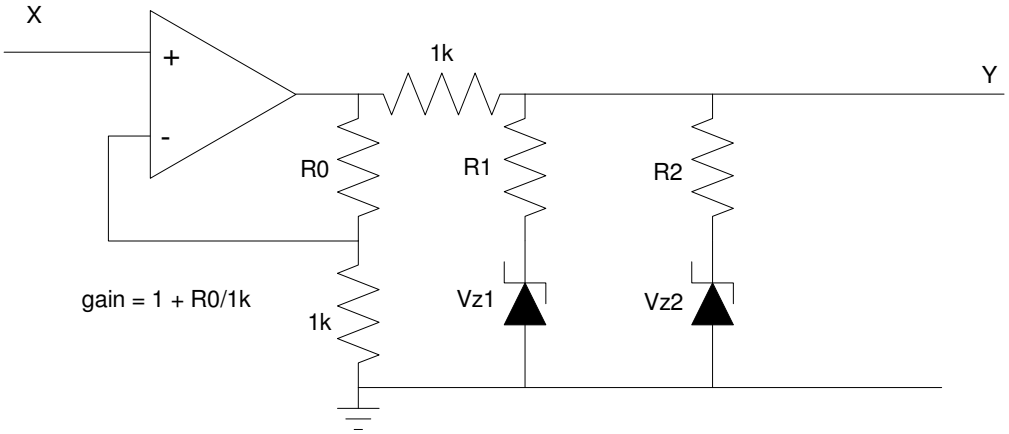

ECE 320 - Final (part 2) - Name _____

Semiconductors and Diode Circuits

Open-Book, Open Notes. Calculators & Matlab permitted. Individual Effort

1) Transistor Load Lines: Determine the gain of the following transistor (beta), the load line, and the Q point when Vin is 3V and 6V

Load Line	Current Gain (beta)	Q point when Vin = 3V	Q-point when Vin = 6V
show on graph		show on graph	show on graph

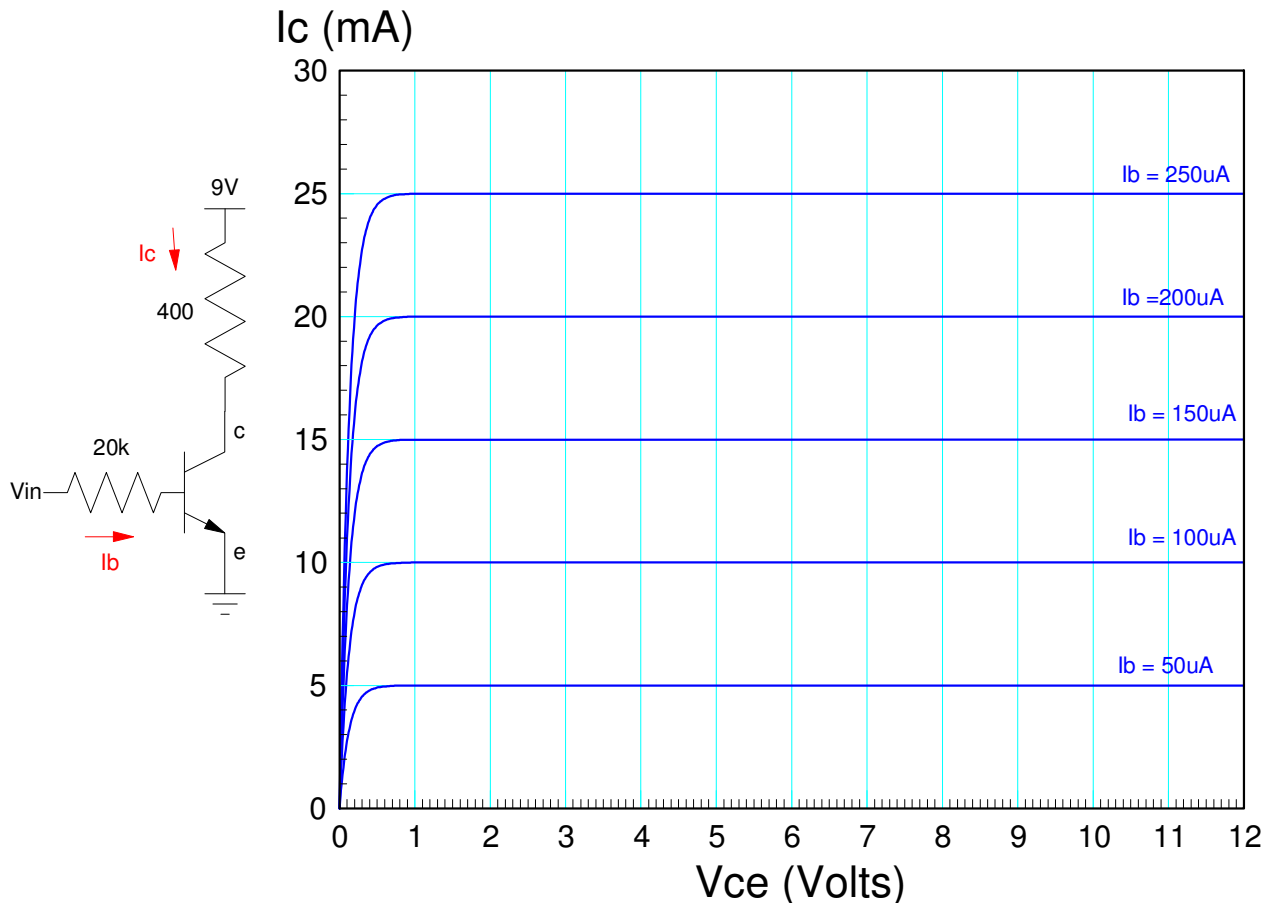

2) Transistor Switch: Determine Rc and the range of Rb that results in Ic = 100mA when Vin = 5V. Assume an ideal 3904 NPN transistor

- Vbe = 0.7V
- Vce = 0.2V when saturated
- β = 100

min value of Rb	max value of Rb	Rc so that Ic = 100mA

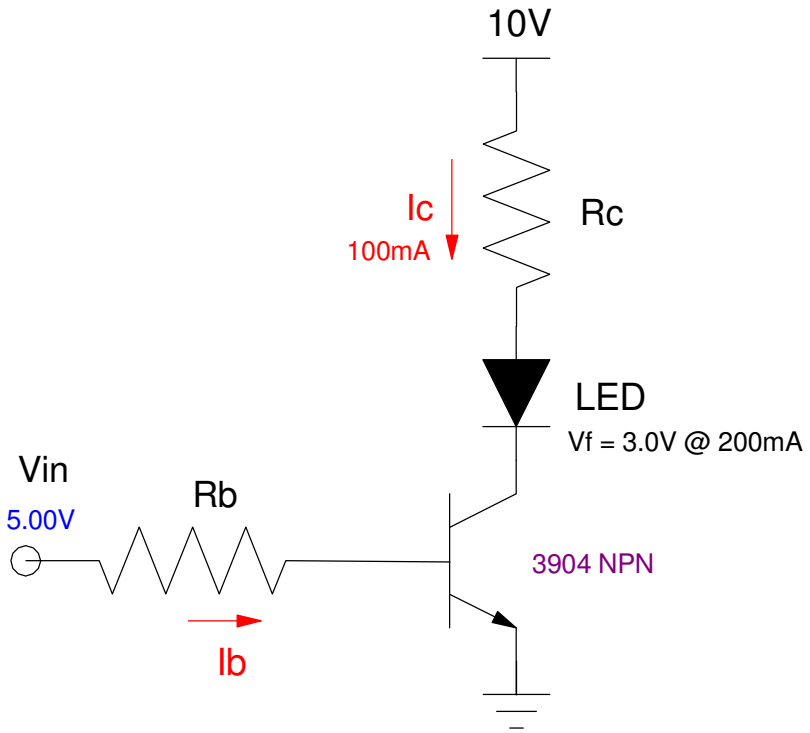

3) Schmitt Trigger: Design a Schmitt Trigger so that

- The LED is on (Ic = 100mA) when R < 440,
- The LED is off (Ic = 0mA) when R > 530,
- No change (on or off) for 440 < R < 530

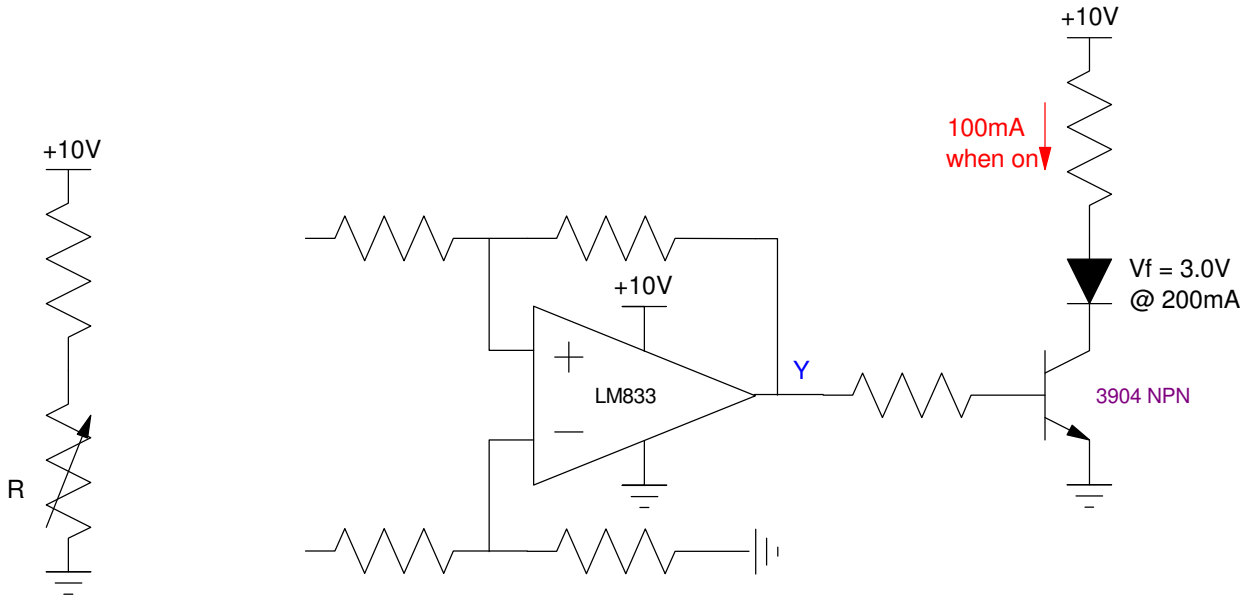

4) DC to DC Converter: Determine the voltages at V1 and V2 (both DC and AC)

V1		V2	
V1(DC)	V1pp (AC)	V2(DC)	V2pp (AC)

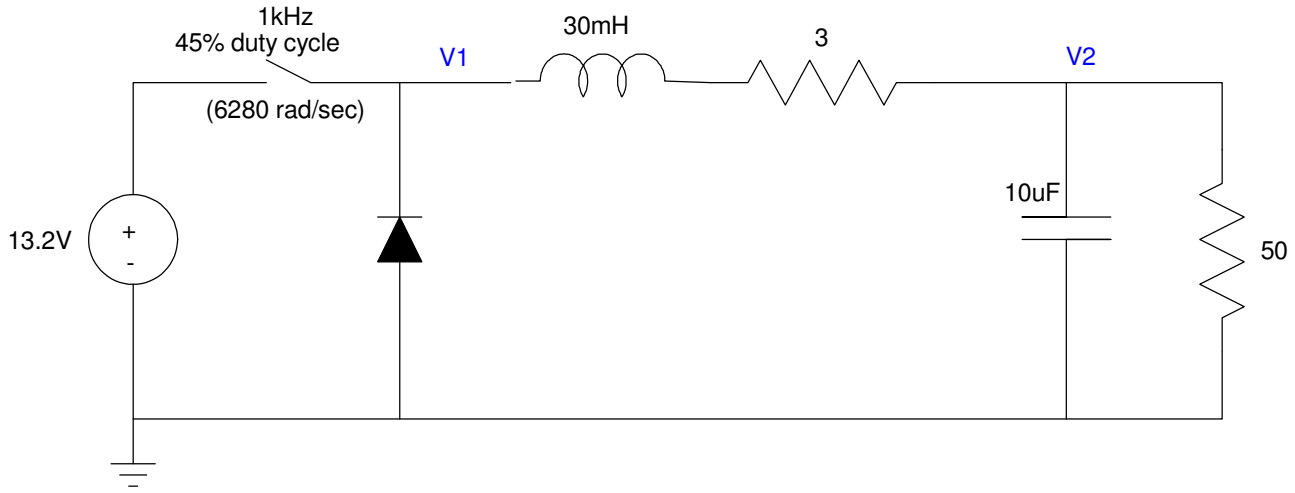

5) MOSFET Switch: Determine Ids and Vds whenVg = 5V and Vg = 10V. Assume

- kn = 150 mA/V2
- Vth = 2.0V (turn-on voltage)

Vg = 5.0V		Vg = 10.0V	
Vds	Ids	Vds	Ids

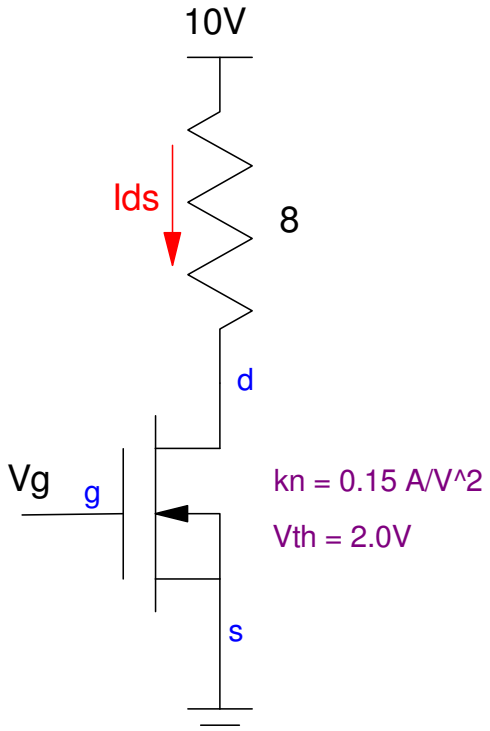

6) CMOS Logic. Design a circuit to implement Y = A XOR B using CMOS logic

Y(A,B)		B	
		0	1
A	0	0	1
	1	1	0