ECE 320 - Quiz #1a - Name _____

EE 206 Review. September 3, 2020

1) Determine the resistance Rab

Rab = 259.92 Ohms

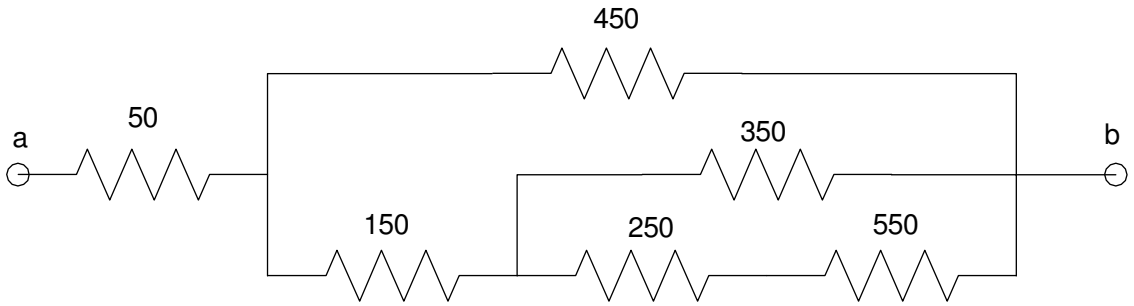

2) Determine the resistace Rab (it will be a complex number)

Rab = 212.54 + j69.45

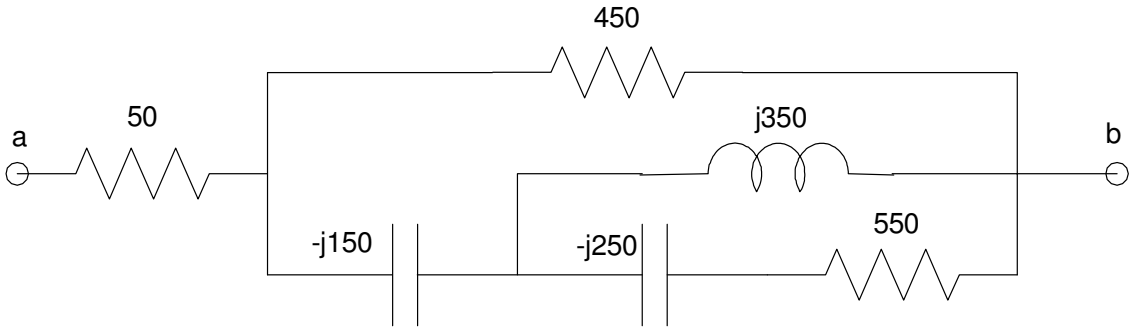

3) Votlage Nodes: Give N voltage node equations to solve for the N unknown voltages.

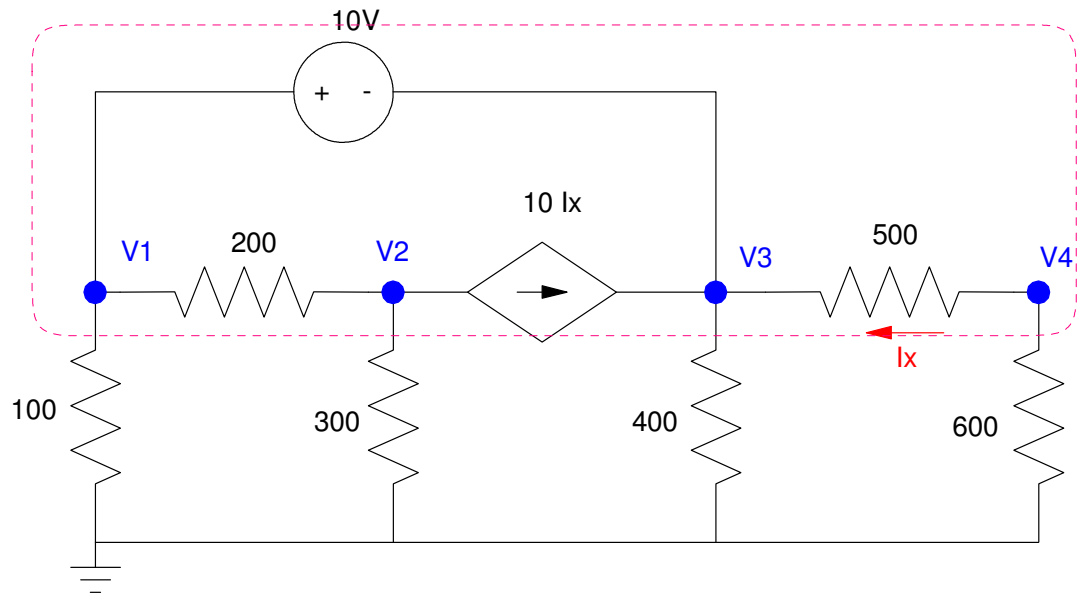

4 nodes plus a dependent source means we need 5 equations to solve for 5 unknowns

$$V_1 - V_3 = 10$$

$$I_x = \left(\frac{V_4 - V_3}{500}\right)$$

$$\left(\frac{V_2 - V_1}{200}\right) + \left(\frac{V_2}{300}\right) + 10I_x = 0$$

$$\left(\frac{V_4 - V_3}{500}\right) + \left(\frac{V_4}{600}\right) = 0$$

$$\left(\frac{V_1}{100}\right) + \left(\frac{V_2}{300}\right) + \left(\frac{V_3}{400}\right) + \left(\frac{V_4}{600}\right) = 0$$

4) Current Loops: Give N current loop equations to solve for the N unknown currents

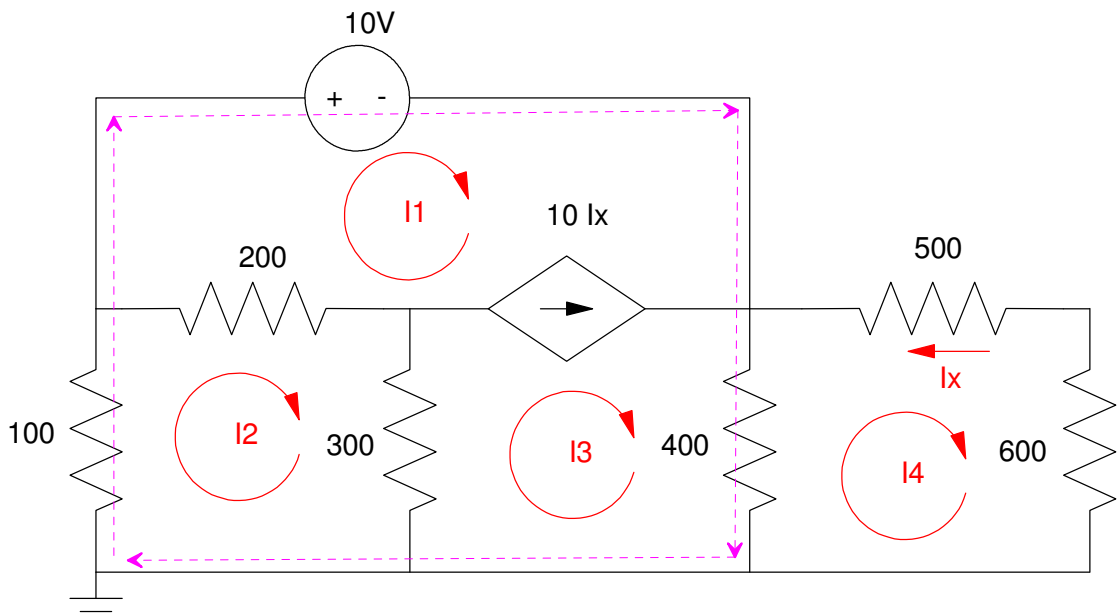

4 loops plus Ix means we need 5 equations to solve for 5 unknowns

$$I_x = -I_4$$

$$10I_x = I_3 - I_1$$

$$100I_x + 200(I_2 - I_1) + 300(I_2 - I_3) = 0$$

$$400(I_4 - I_3) + 500I_4 + 600I_4 = 0$$

$$100I_2 + 10 + 400(I_3 - I_4) = 0$$

5) Signals X and Y are displayed on an oscilloscope. Give the phasor representation for these two voltages

Frequency (Hz)	X		Y	
	Amplitude	Phase	Amplitude	Phase
66.7Hz	**8.5V**	**-72 deg**	**6.5V**	**-144 deg**

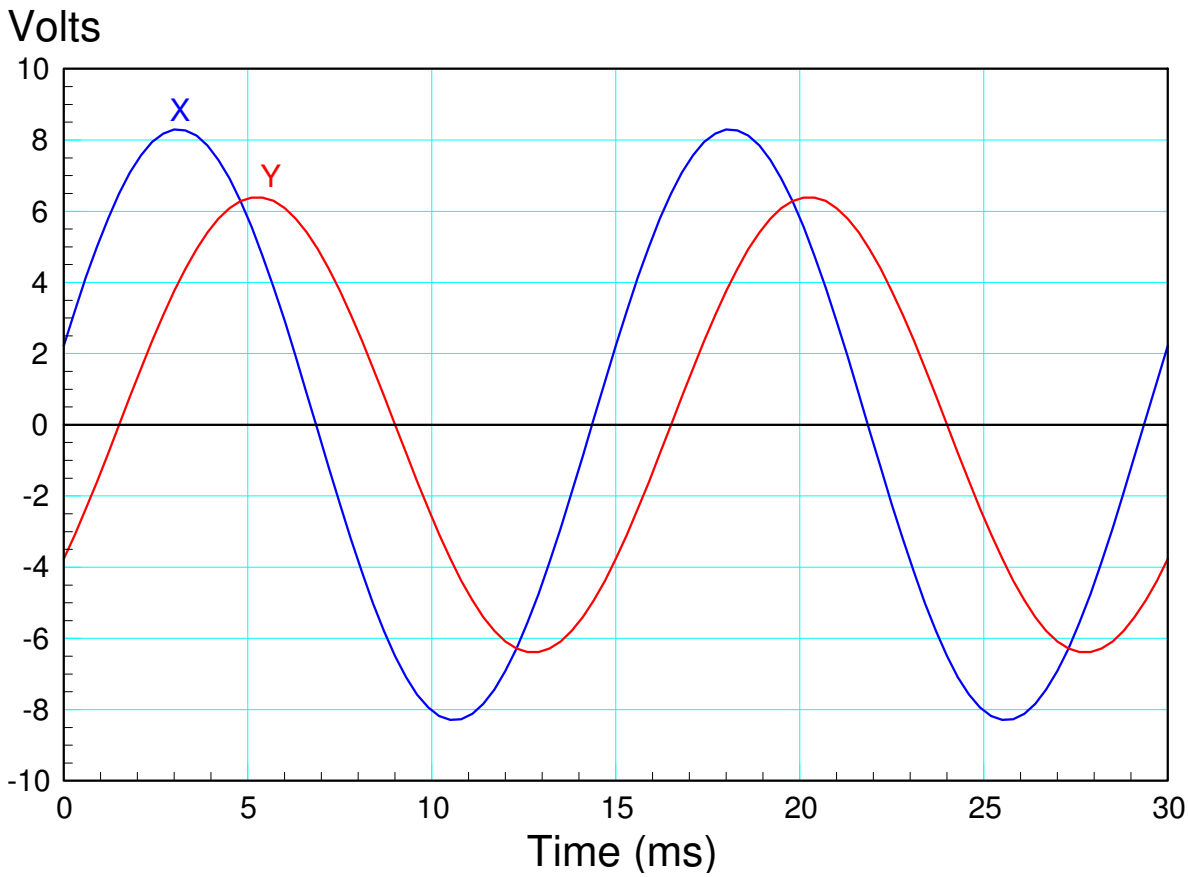

period = 15ms. frequency = 1/15ms = 66.7Hz

The amplitude is the maximum voltage.

The phase shift is the delay, reltive to the period

$$\phi_x = -\left(\frac{\text{3ms delay}}{\text{15ms period}}\right)360^0 = -72^0$$

$$\phi_y = -\left(\frac{\text{6ms delay}}{\text{15ms period}}\right)360^0 = -144^0$$

6) Determine V2(t) assuming

$$V_1(t) = 10 + 12\sin(300t)$$

V2(t) = 9.091 - 0.540 cos(300t) - 1.293 sin(300t)

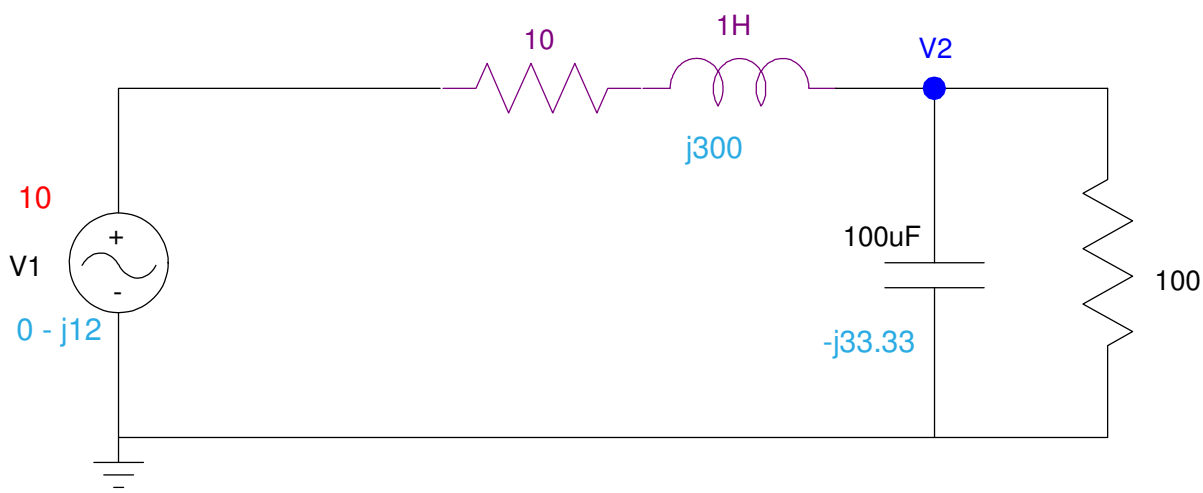

DC:

$$V_2 = \left(\frac{100}{100+10}\right)10 = 9.091V$$

AC:

$$100 \,||\, -j33.33 = 10 - j30$$

$$V_2 = \left(\frac{(10-j30)}{(10-j30)+(10+j300)}\right)(0 - j12)$$

$$V_2 = -0.540 + j1.293$$

$$v_2(t) = -0.540\cos(300t) - 1.293\sin(300t)$$