ECE 320 - Quiz #3 - Name _____

LEDs, AC to DC Converters - Fall 2020

1) Determine the voltages and currents for the following circuit. Assume ideal red LEDs (Vf = 1.9V).

V1	V2	V3	Id1	Id2	Id3
5.14V	**3.8V**	**1.9V**	**0mA**	**6.7mA**	**22.9mA**

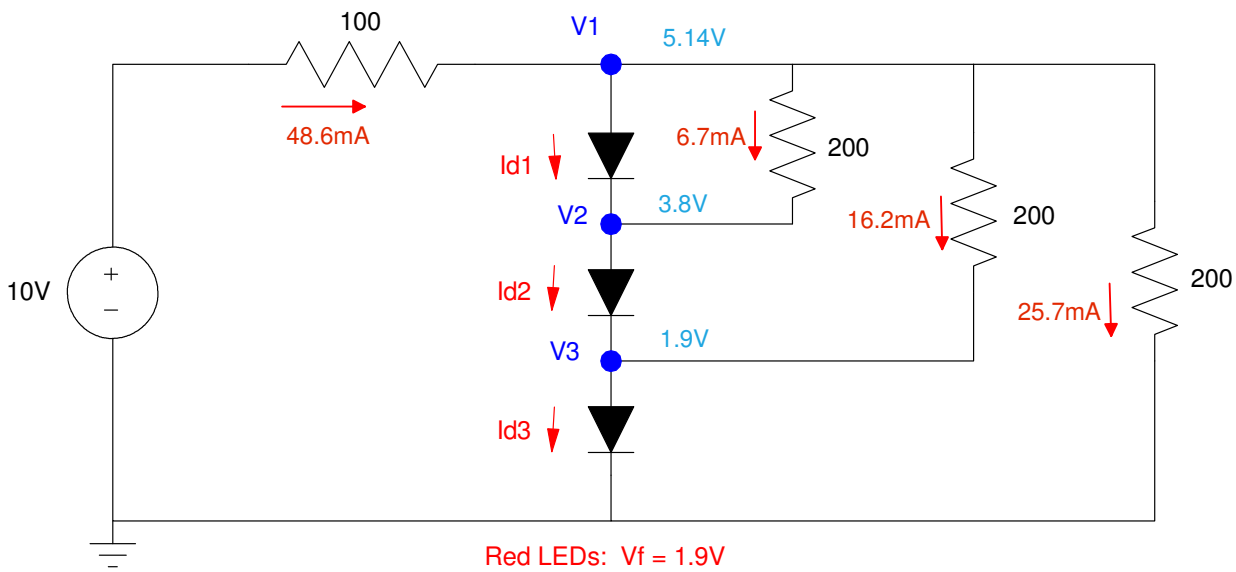

Guess all three diodes are on resulting in V1 = 5.7V. Id1 is then

$$\left(\frac{10-5.7}{100}\right) = I_{d1} + \left(\frac{1.9V}{200}\right) + \left(\frac{3.8V}{200}\right) + \left(\frac{5.7V}{200}\right)$$

$$I_{d1} = -14mA$$

Guess diode 1 is off (Id1 = 0)

$$\left(\frac{V_1-10}{100}\right) + 0 + \left(\frac{V_1-3.8V}{200}\right) + \left(\frac{V_1-1.9}{200}\right) + \left(\frac{V_1}{200}\right) = 0$$

$$V_1 = 5.14V$$

$$I_{d2} = \left(\frac{V_1-V_2}{200}\right) = 6.7mA$$

$$I_{d3} = I_{d2} + \left(\frac{V_1-V_3}{200}\right) = 22.9mA$$

2) Determine the voltages and currents for the following circuit. Assume ideal red LEDs (Vf = 1.9V).

V1	V2	V3	Id1	Id2	Id3
5.14V	**3.8V**	**1.9V**	**0mA**	**6.7mA**	**22.9mA**

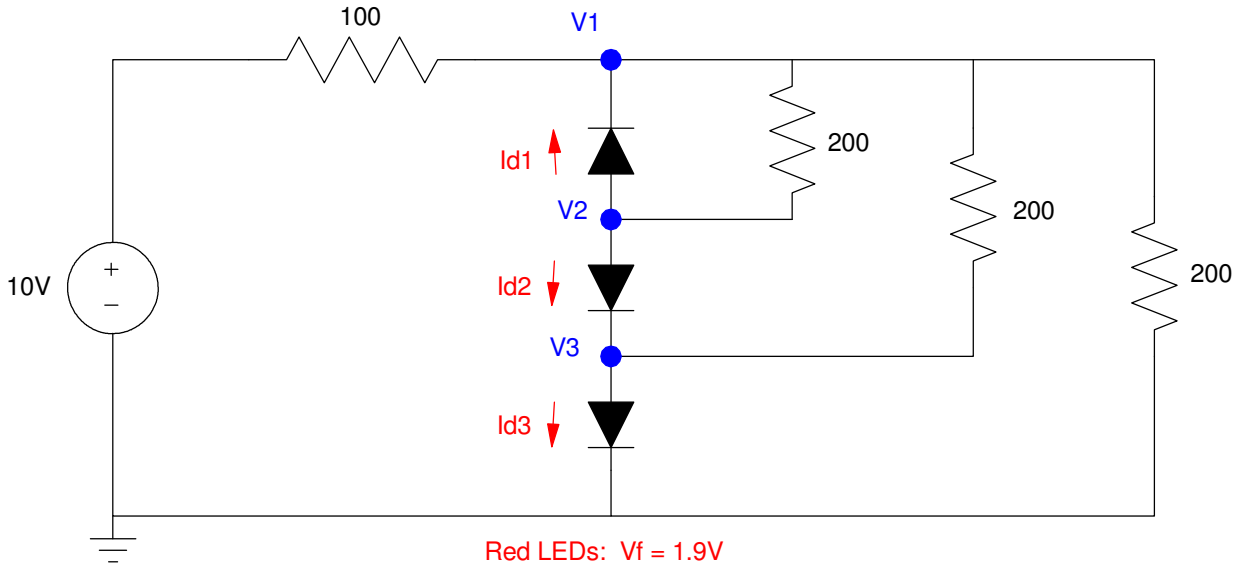

Diode #1 is off so it is the same solution as problem #1

3) Determine the resistances so that the following RGB LED outputs Kelly green:

- Red = 1647 mcd
- Green = 6157 mcd
- Blue = 2160 mcd

The specifications for the RGB LED are:

color	Vf	mcd @ 20mA
red	2.0V	10,000
green	3.0V	10,000
blue	3.2V	10,000

Rr	Rg	Rb
2428 Ohms	**568 Ohms**	**1547 Ohms**

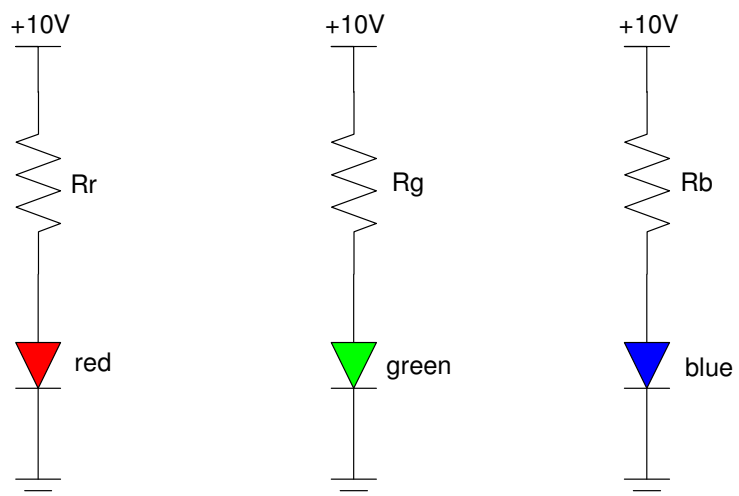

$$I_r = \left(\frac{1647mcd}{10{,}000mcd}\right)20mA = 3.294mA$$

$$R_r = \left(\frac{10V-2.0V}{3.294mA}\right) = 2428\Omega$$

$$I_g = \left(\frac{6157mcd}{10{,}000mcd}\right)20mA = 12.31mA$$

$$R_g = \left(\frac{10V-3.0V}{12.31mA}\right) = 568\Omega$$

$$I_b = \left(\frac{2160mcd}{10{,}000mcd}\right)20mA = 4.32mA$$

$$R_b = \left(\frac{10V-3.2V}{4.32mA}\right) = 1574\Omega$$

4) The following waveforms are found using CircuitLab for V1 and V2 for an AC to DC converter. Determine the following

Frequency (Hz)	V1 (top waveform)		V2 (lower waveform)	
	DC (average)	AC (Vpp)	DC (average)	AC (Vpp)
60 Hz	**18.0V**	**2.40Vpp**	**16.35V**	**0.50Vpp**

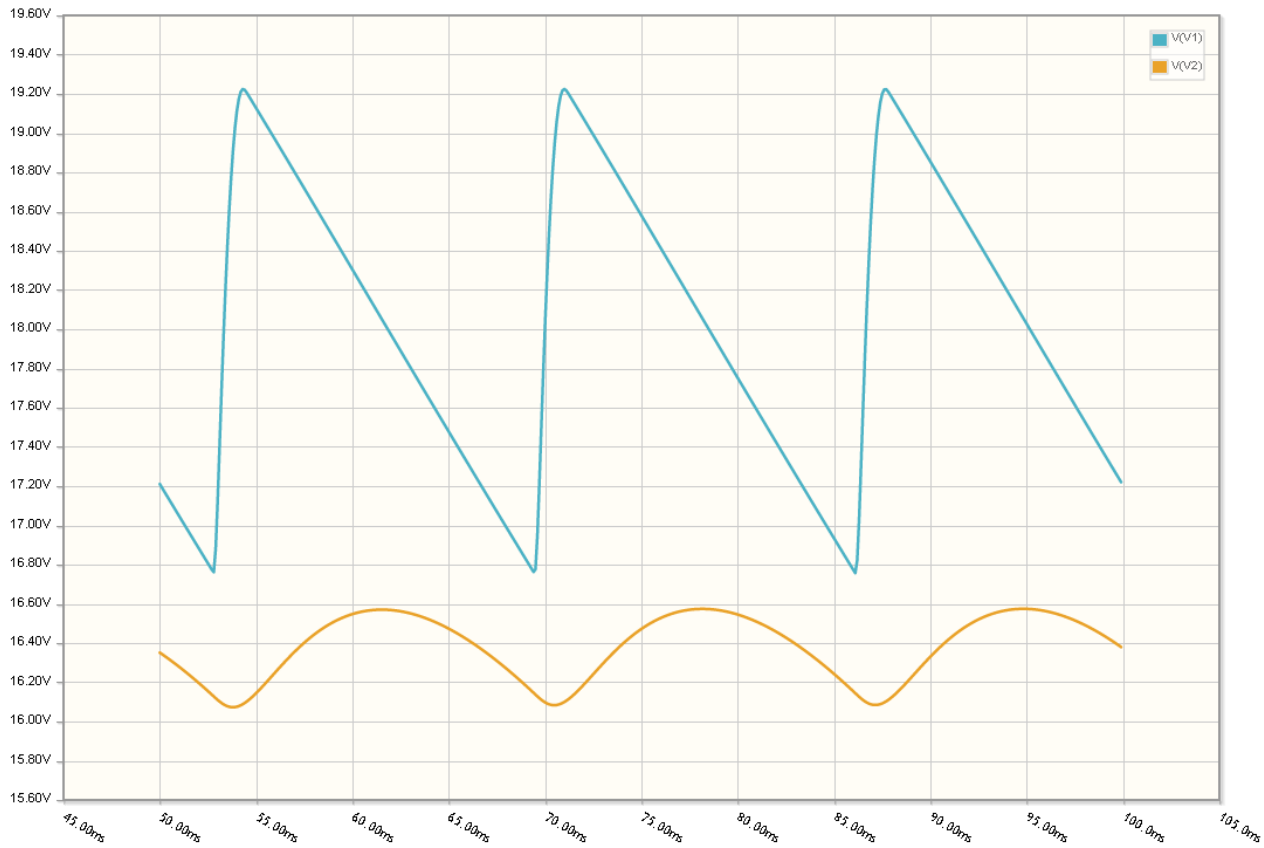

5) Determine the voltages V1 and V2 (both DC and AC)

V1		V2	
DC (mean(V1))	AC (V1pp)	DC (mean(V2))	AC (V2pp)
18.01V	**2.573Vpp**	**14.41V**	**0.232Vpp**

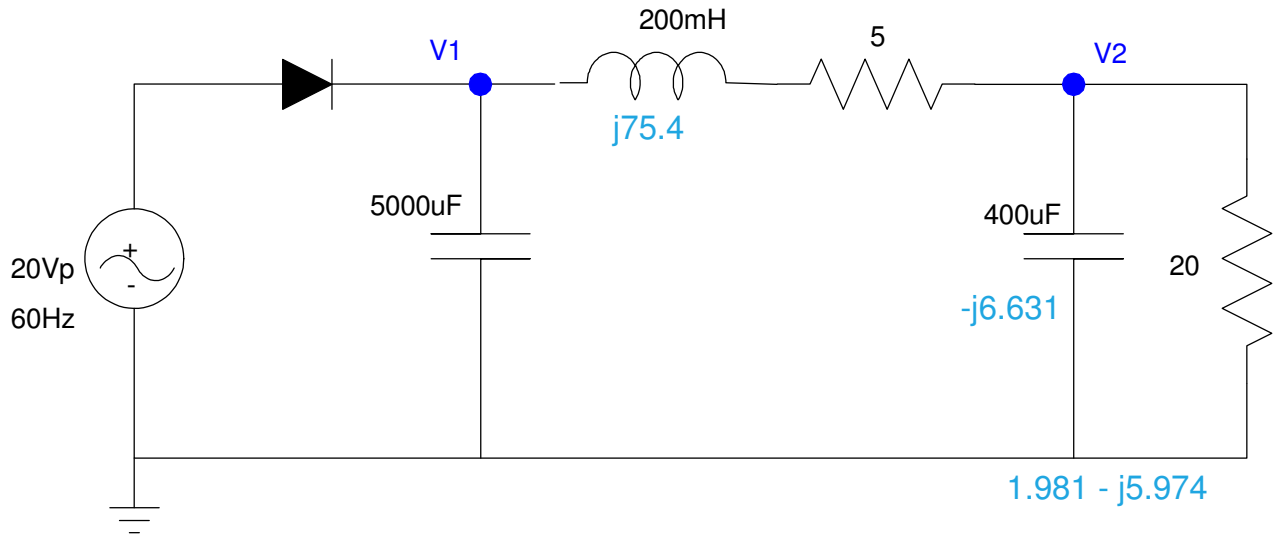

max(V1) = 19.3V

$$I \approx \left(\frac{19.3V}{20+5}\right) = 772mA$$

$$I = C\frac{dV}{dt}$$

$$772mA = 5000\mu F\,\frac{dV}{1/60}$$

$$V_1(AC) = dV = 2.573V_{pp}$$

$$V_1(DC) = 19.3V - \frac{2.573V_{pp}}{2} = 18.01V$$

$$V_2(DC) = \left(\frac{20}{20+5}\right)18.01V = 14.41V$$

$$V_2(AC) = \left(\frac{(1.981-j5.974)}{(1.981-j5.974)+(5+j75.4)}\right)(2.573V_{pp})$$

$$V_2(AC) = 0.232V_{pp}$$

6) Determine R, C1, and C2 so that

- The DC current through R is 100mA
- The ripple at V1 is 4Vpp and
- The ripple at V2 = 500mVpp

C1	C2	R
416.7uF	**35.88uF**	**163 Ohms**

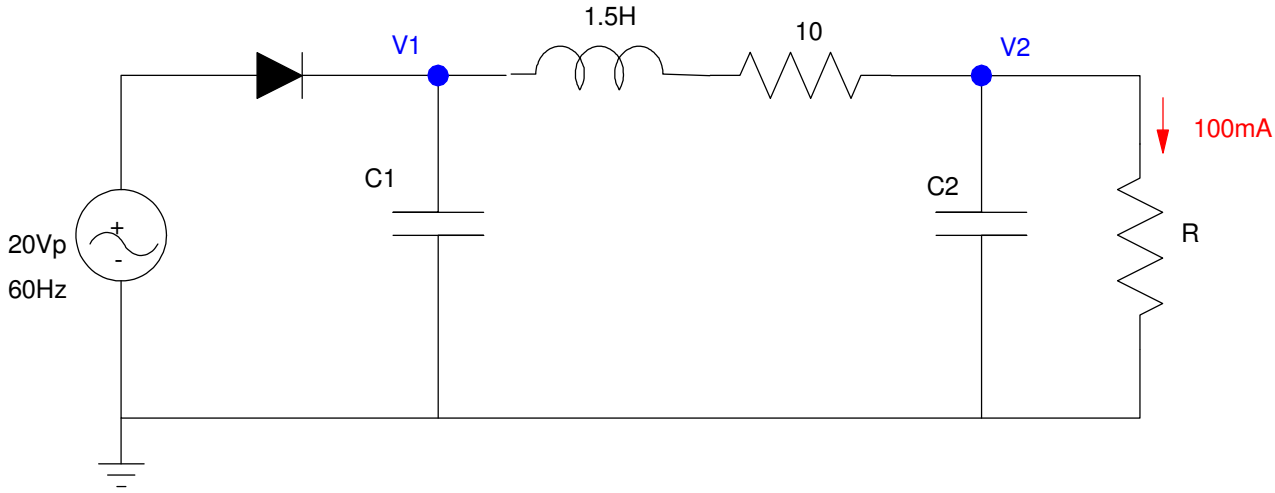

$$V_1(DC) = 19.3V - \frac{4V_{pp}}{2} = 17.3V$$

$$R_{total} = \frac{17.3V}{100mA} = 173\Omega$$

$$R = 163\Omega$$

$$I = C\frac{dV}{dt}$$

$$100mA = C_1 \frac{4V}{1/60s}$$

$$C_1 = 416.7\mu F$$

If C2 = 0

$$V_2(AC) = \left(\frac{163}{163+(10+j565.5)}\right)4V_{pp}$$

$$V_2(AC) = 1.103V_{pp}$$

To reduce the ripple to 500mVpp, the impedance of C2 should be

$$\left|\frac{1}{j\omega C_2}\right| = \left(\frac{500mV_{pp}}{1.103V_{pp}}\right)163\Omega = 73.9\Omega$$

$$C_2 = 35.88\mu F$$

Bonus: What is the next figure in the sequence:

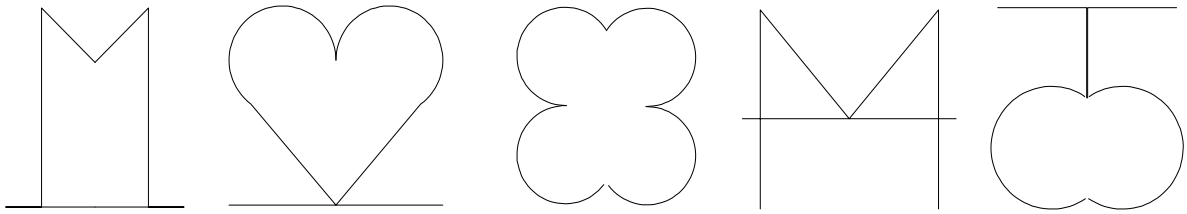

Look at the right half

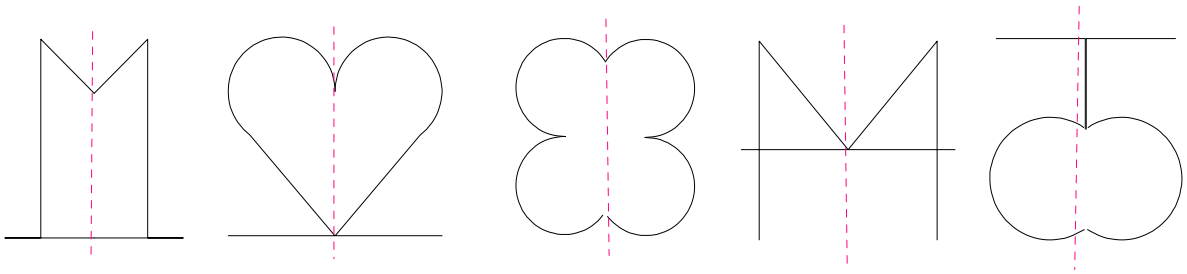

It's the numbers 1, 2, 3, 4, 5

The next figure is then the number 6 and it's mirror image