ECE 320 - Quiz #4 - Name _____

Max/Min, Clipper, Transistors - September 24, 2020

1) Max/Min: Determine the voltages and currnets for the following min/max circuit

Id1	Id2	Id3	Id4	Id5	Id6
0	**15.3mA**	**0**	**1.2mA**	**6.1mA**	**0**

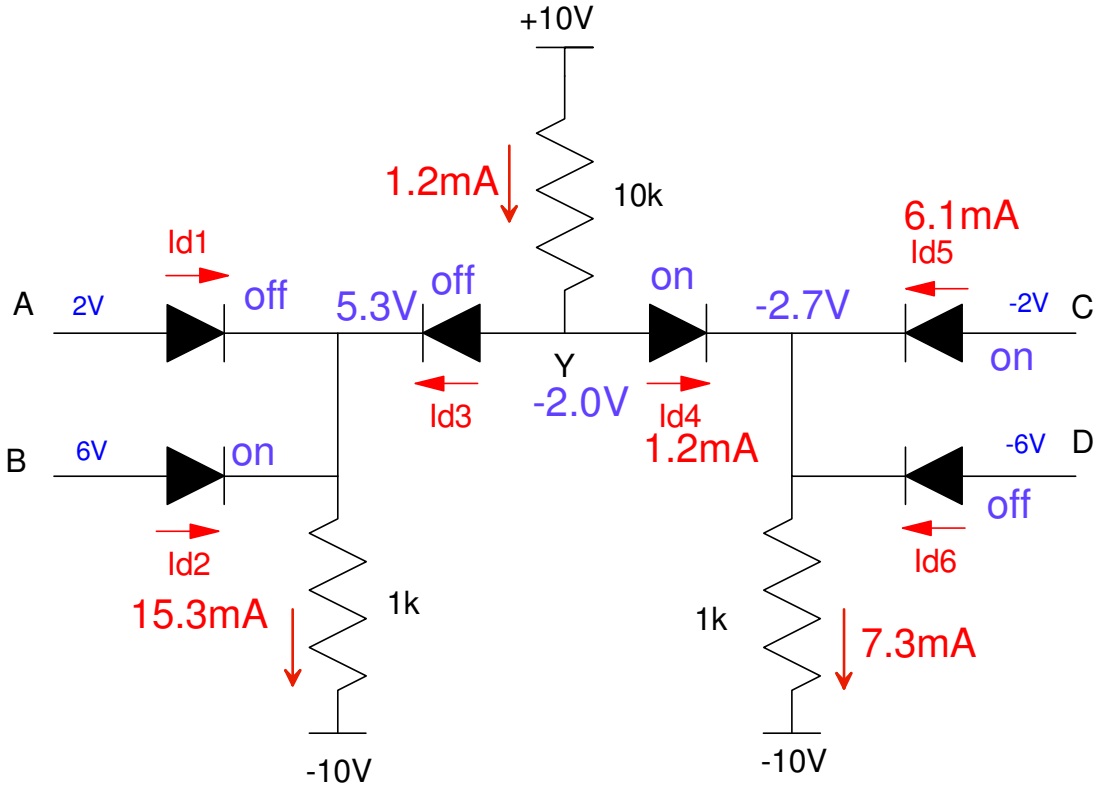

2) Clipper: Determine R and Vz to approximate the following function

$$y = 20\sin\left(\frac{x}{7}\right) \qquad 0 < x < 10$$

R0	Vz1	R1	Vz2	R2
1.67k	**8.0V**	**5846**	**16.0V**	**854**

answers vary depending upon how you draw your lines

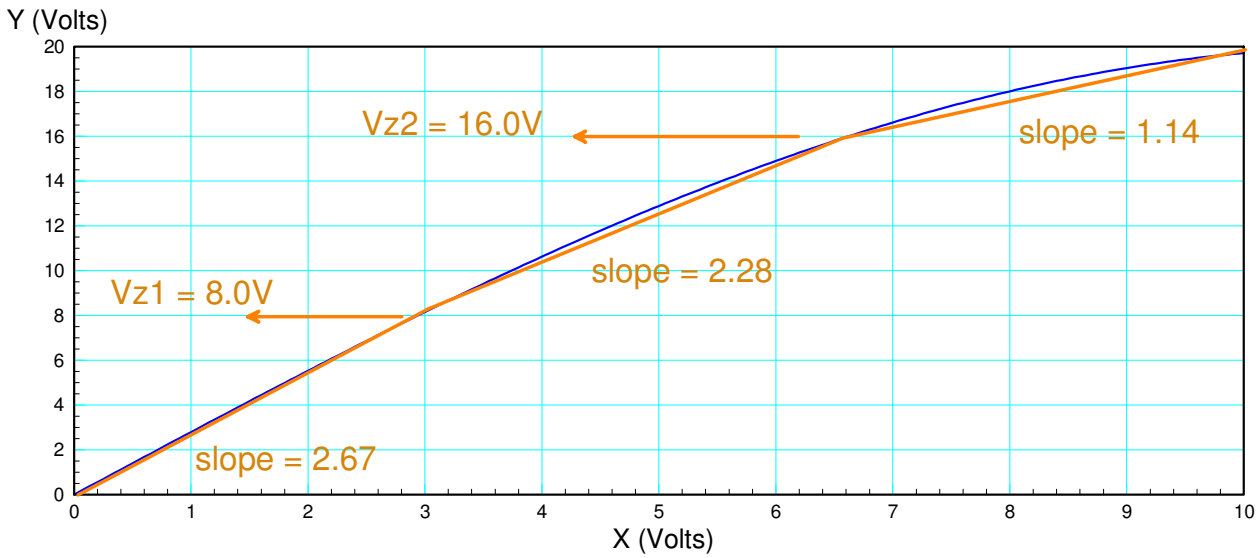

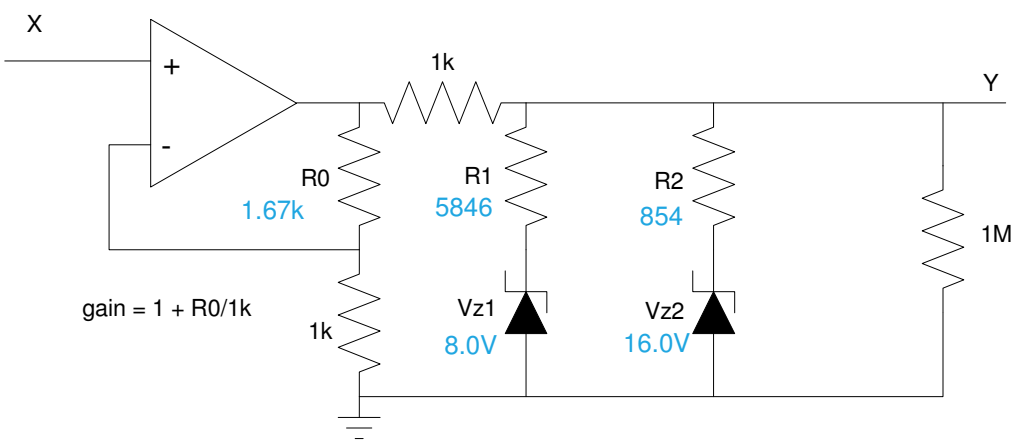

Answers will vary depending upon how you draw the orange lines. As drawn

- Vz1 = 8.0V
- Vz2 = 16.0V
- $1 + \frac{R_0}{1k} = 2.67 \qquad \Rightarrow \qquad R_0 = 1.67k$
- $\left(\frac{R_1}{R_1 + 1k}\right) = \frac{2.28}{2.67} \qquad \Rightarrow \qquad R_1 = 5846$
- $\left(\frac{R_{12}}{\mathbf{R}_{12} + 1k}\right) = \left(\frac{1.14}{2.67}\right) \qquad \Rightarrow \qquad R_{12} = R_1 || R_2 = 745\Omega$

3) Clipper: Design a circuit to clip the voltage at +8V and -3V

$$y = \begin{cases} +8V & x > 8 \\ x & -3 < x < 8 \\ -3V & x < -3 \end{cases}$$

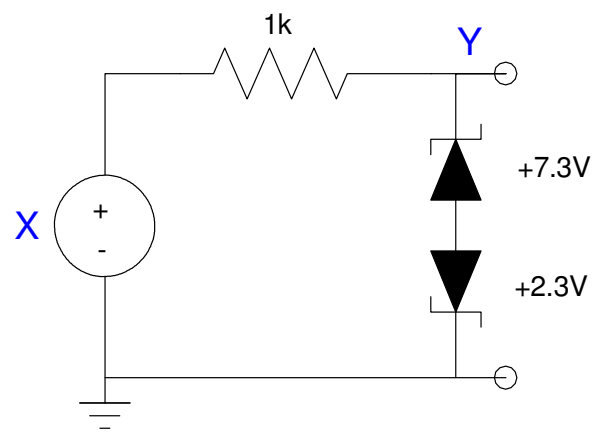

4) The VI characteristics for an NPN transistor are shown below

- Draw the load line for the following circuit
- Show on the load line the operating point (Vce, Ic) when Vin = {0V, 2.5V, 5V}

Assume

- Vbe = 0.7V
- Vce = 0.2V when saturated

Load Line	Vin = 0V	Vin = 2.5V	Vin = 5V
show on graph	show (Vce, Ic) on graph	show (Vce, Ic) on graph	show (Vce, Ic) on graph

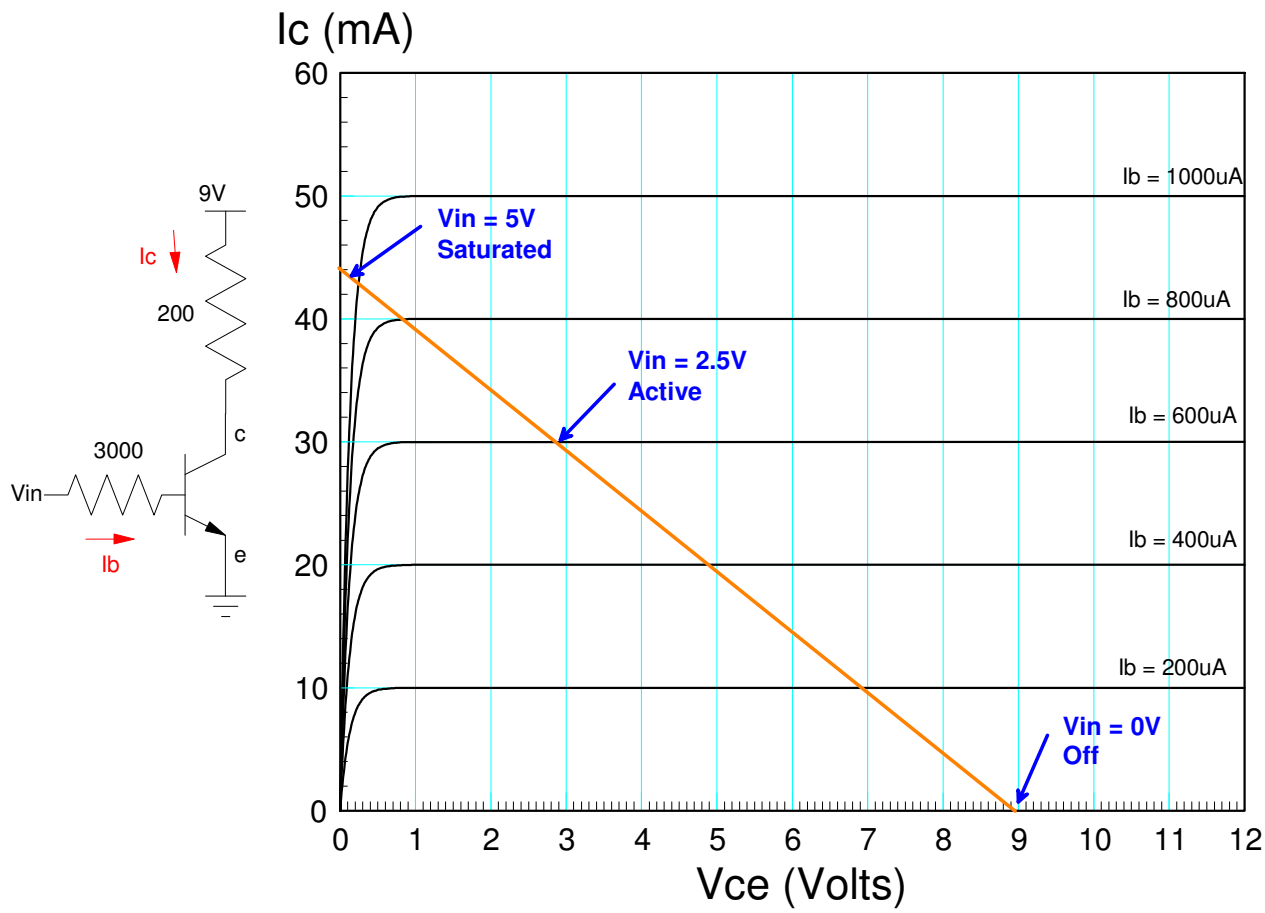

Vin = 2.5V

$$I_b = \left(\frac{2.5V - 0.7V}{3000}\right) = 600\mu A$$

Vin = 5.0V

$$I_b = \left(\frac{5V - 0.7V}{3000}\right) = 1.433mA$$

5) The voltages for the following circuit are measured (shown below). From these measurements, determine the following:

Ib (mA)	Ic (mA)	Current Gain (beta)	Operating Region off / active / saturated
2.150mA	**61.08mA**	**28.41**	**Active** Vce > 0.2V

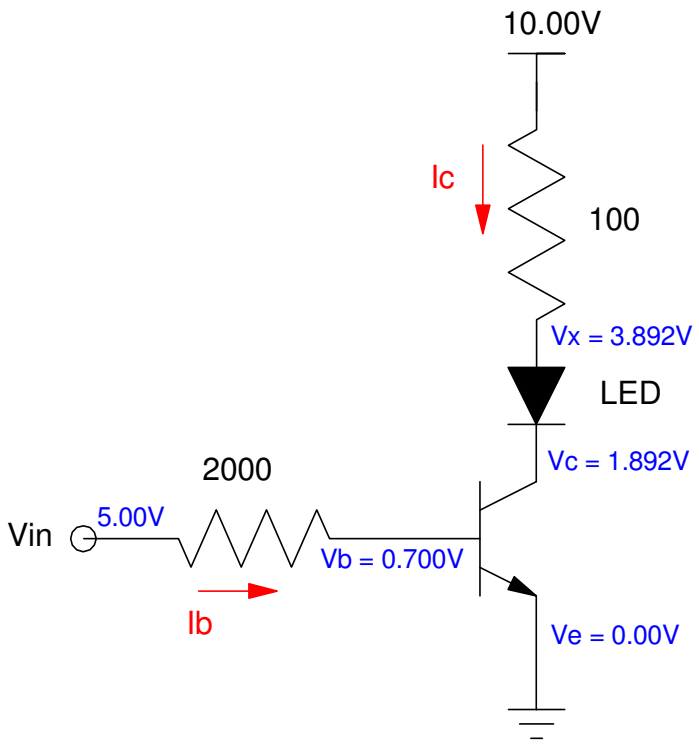

6) Assume an ideal 3904 transistor

- Vce(sat) = 0.2V
- Vbe = 0.7V
- $\beta = 100$

Determine the voltages {Vb, Vc} and the currents {Ib, Ic}

Vb	Vc	Ib	Ic
0.70V diode Vbe	**2.2372V** active mode	**768.6uA**	**77.63mA**

$$I_c = I_b + 100 I_b$$

$$\left(\frac{V_c - 0.7}{2000}\right) = I_b$$

$$\left(\frac{10 - V_c}{100}\right) = I_c = 101 I_b$$

$$\left(\frac{10 - V_c}{100}\right) = 101\left(\frac{V_c - 0.7}{2000}\right)$$

$$V_c = 2.2372V$$

$$I_c = 77.63mA$$

$$I_b = 768.6\mu A$$

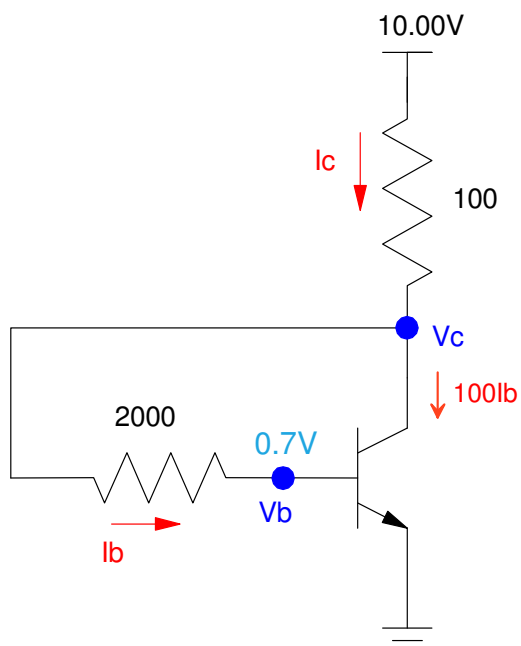

Bonus! A diode is a pn juncion. A transistor is an npn junction. Why can't you make a transistor by putting two 2N1004 diodes back-to-back?

ans: The base has to be very thin so that the electrons that flow emitter to base pass right through the base and wind up at the collector. If you use two diodes, the base is too thick.

- np + pn = npn