ECE 320 - Quiz #4 - Name _____

Max/Min, Clipper, Transistors - September 24, 2020

1) Max/Min: Determine the voltages and currnets for the following min/max circuit

Id1	Id2	Id3	Id4	Id5	Id6

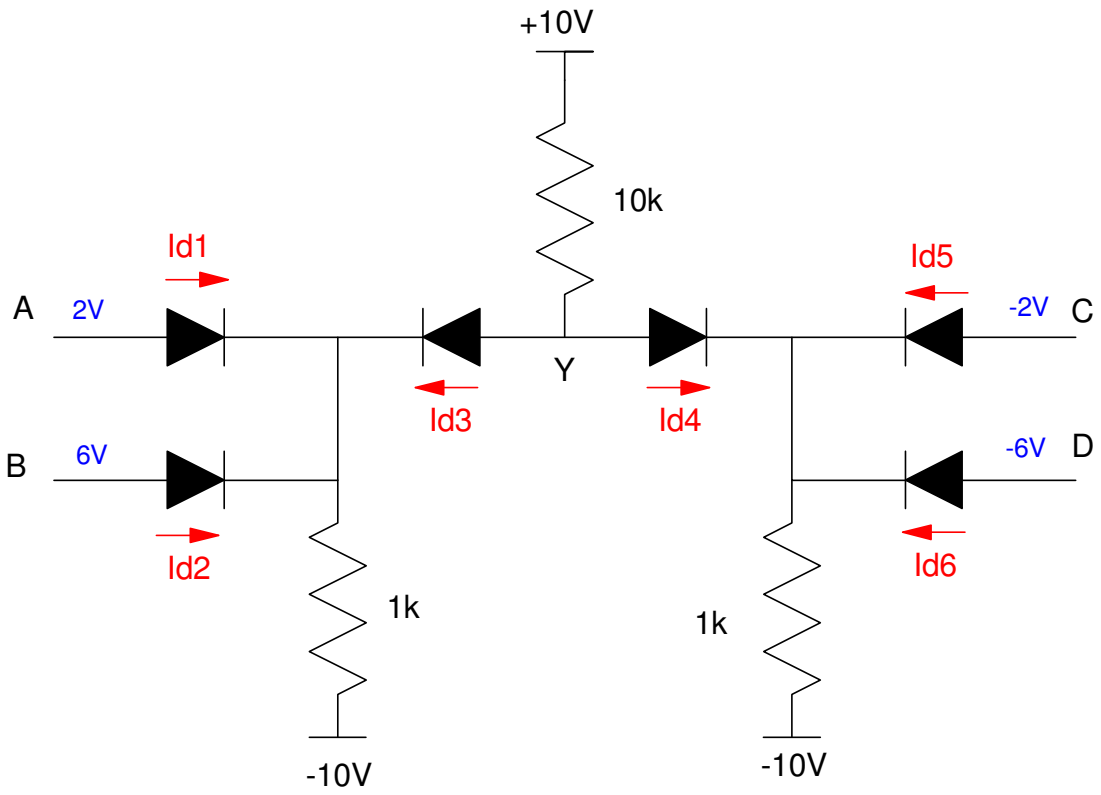

2) Clipper: Determine R and Vz to approximate the following function

$$y = 20\sin\left(\frac{x}{7}\right) \qquad 0 < x < 10$$

R0	Vz1	R1	Vz2	R2

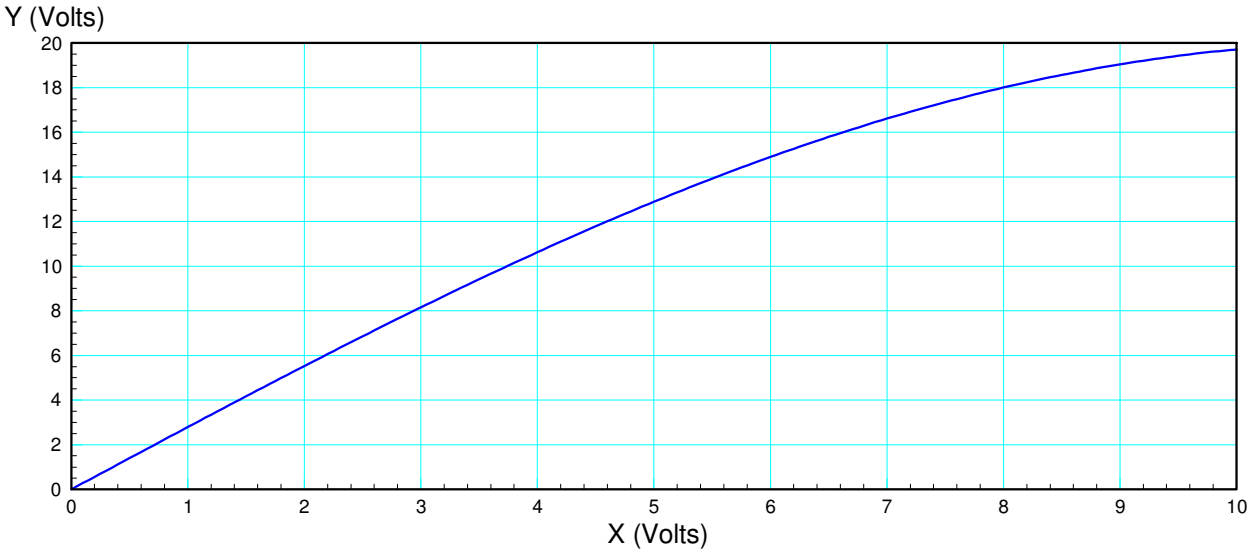

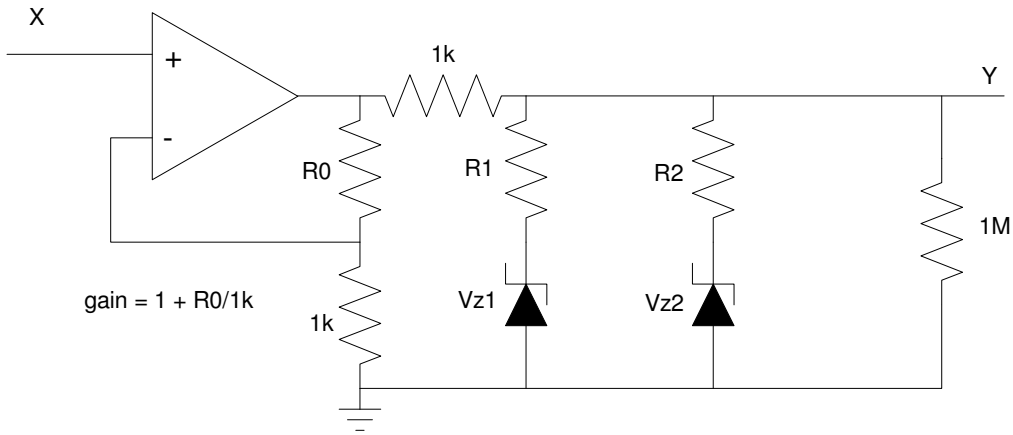

3) Clipper: Design a circuit to clip the voltage at +8V and -3V

$$y = \begin{cases} +8V & x > 8 \\ x & -3 < x < 8 \\ -3V & x < -3 \end{cases}$$

4) The VI characteristics for an NPN transistor are shown below

- Draw the load line for the following circuit
- Show on the load line the operating point (Vce, Ic) when Vin = {0V, 2.5V, 5V}

Assume

- Vbe = 0.7V
- Vce = 0.2V when saturated

Load Line	Vin = 0V	Vin = 2.5V	Vin = 5V
show on graph	show (Vce, Ic) on graph	show (Vce, Ic) on graph	show (Vce, Ic) on graph

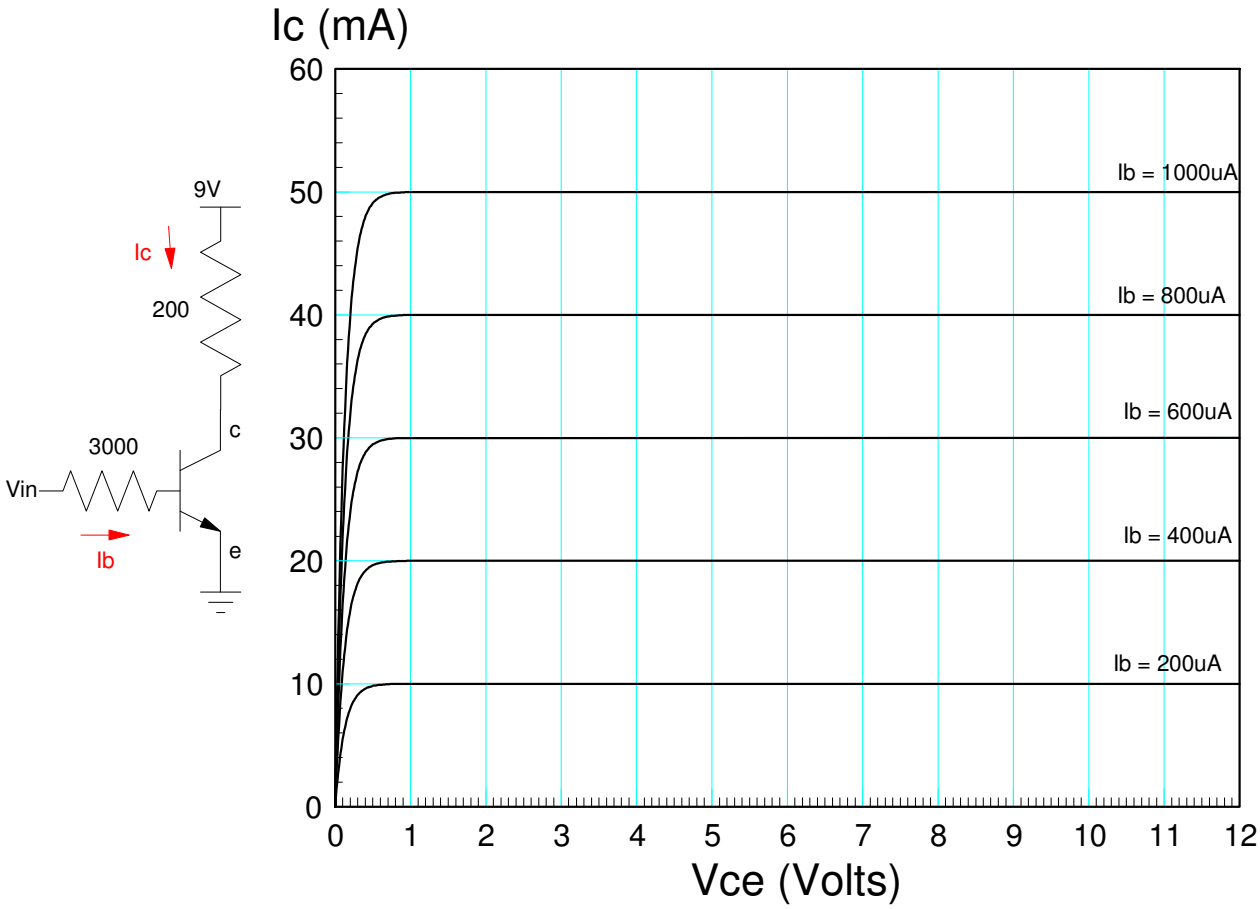

5) The voltages for the following circuit are measured (shown below). From these measurements, determine the following:

Ib (mA)	Ic (mA)	Current Gain (beta)	Operating Region off / active / saturated

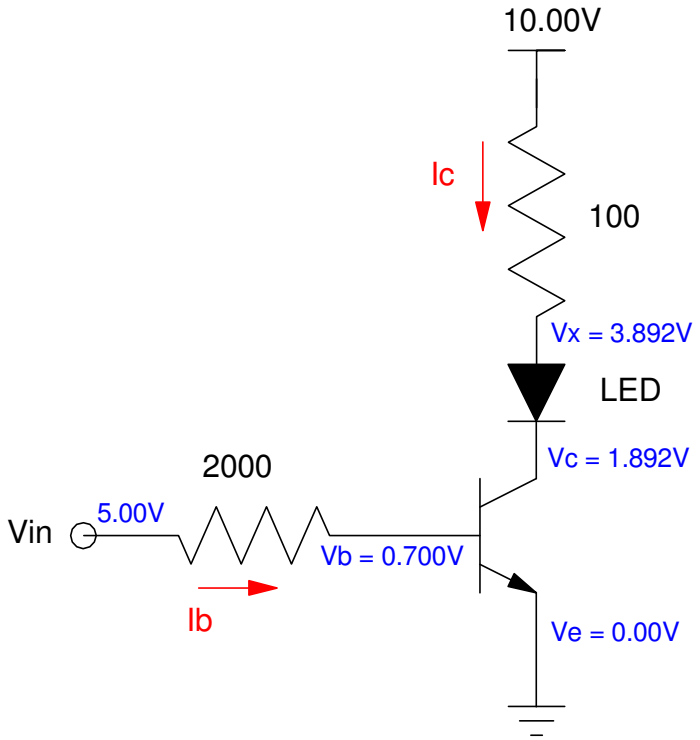

6) Assume an ideal 3904 transistor

- Vce(sat) = 0.2V
- Vbe = 0.7V
- $\beta = 100$

Determine the voltages {Vb, Vc} and the currents {Ib, Ic}

Vb	Vc	Ib	Ic

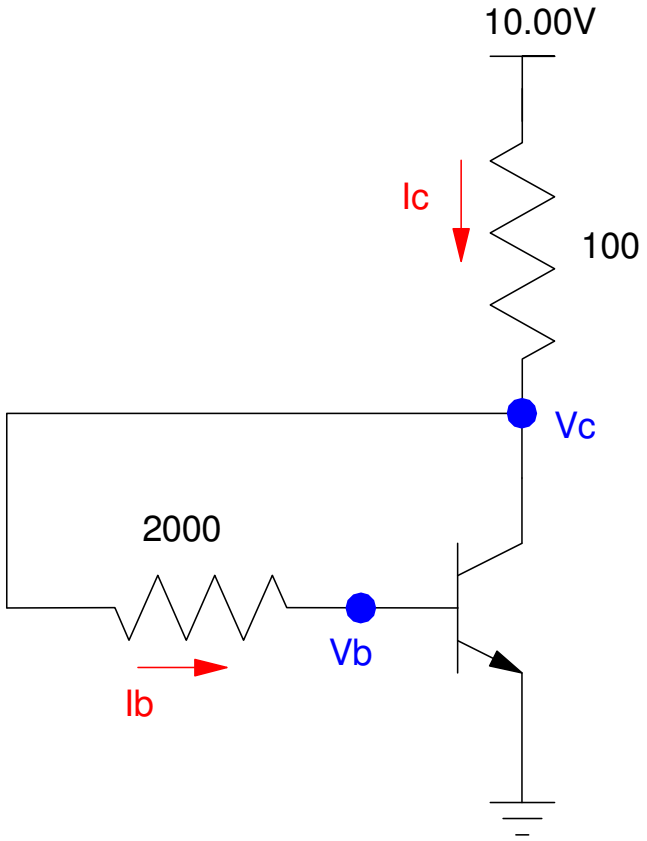

Bonus! A diode is a pn juncion. A transistor is an npn junction. Why can't you make a transistor by putting two 2N1004 diodes back-to-back?

- np + pn = npn