ECE 320 - Quiz #5 - Name _____

555 Timers, Transistor Switch, Comparitors, Schmitt Triggers - October 1, 2020

1) 555 Timers. For the following circuit, the on and off time is equal to

$$T_{on} \approx 0.6931 R_1 C = 300\mu s$$

$$T_{off} \approx 0.6931 R_2 C = 700\mu s$$

Determine R1, R2, and C so that the 555 timer outputs

- A 1kHz square wave (Ton +Toff = 1ms)
- With 30% duty cycle (Ton = 300us, Toff = 700us)

R1	R2	C
4320 depends upon C	**10,099** depends upon C	**0.1 uF**

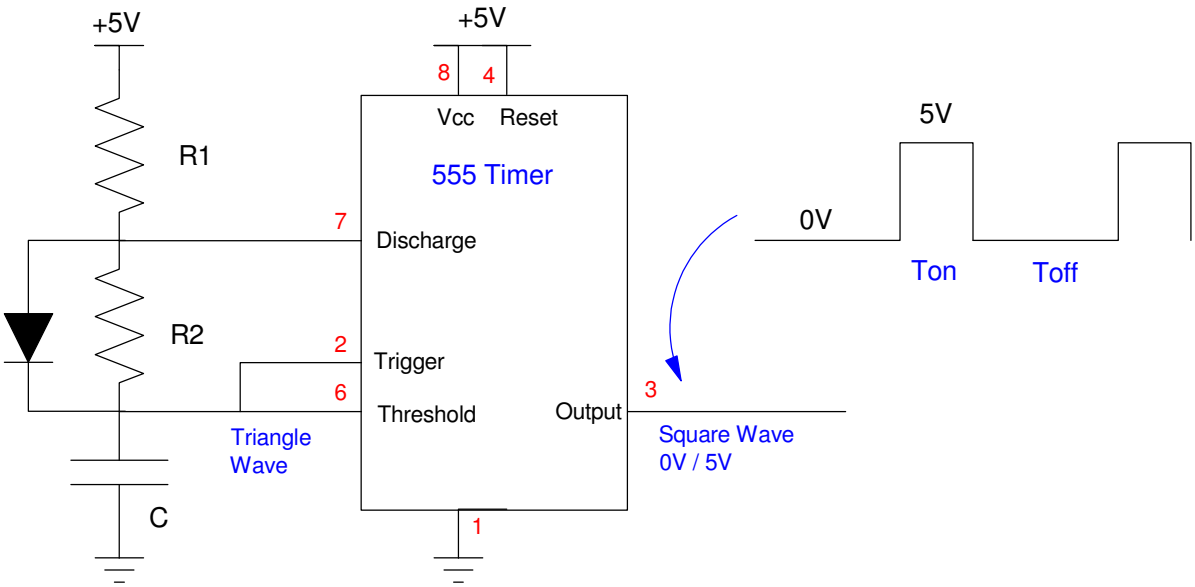

2) Transistor Switch: Design. Specify R1 and R2 so that when Vin = 5.00V,

- Ic = 75mA,
- The transistor is saturated, and
- Ib < 25mA (the maximum output of a 555 timer)

Assume 3904 transistors

- | Vbe | = 0.7V
- | Vce | = 0.2V when saturated
- $\beta = 100$

min value of Rb	max value of Rb	Rc
172 Ohms	**5733 Ohms**	**64 Ohms**

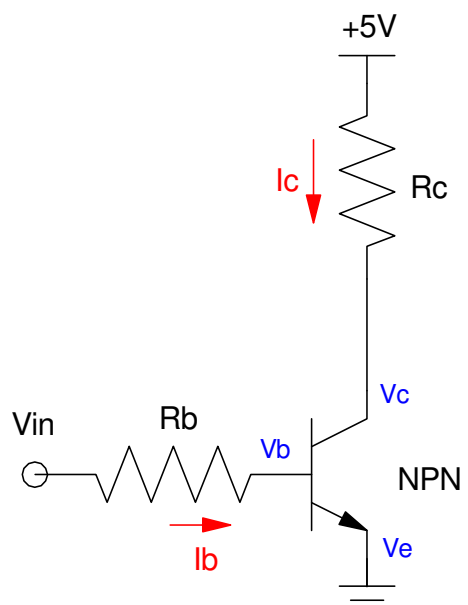

$$R_c = \left(\frac{5V - 0.2V}{75mA}\right) = 64\Omega$$

$$\min(I_b) = \frac{I_c}{\beta} = \frac{75mA}{100} = 750\mu A$$

$$R_b = \left(\frac{5 - 0.7}{750\mu A}\right) = 5733\Omega$$

$$\max(I_b) = 25mA$$

$$R_b = \left(\frac{5 - 0.7}{25mA}\right) = 172\Omega$$

3) Darlington Pair (analysis). Assume two 3904 NPN transistors are connected as a Darlington pair.

- | Vbe | = 0.7V
- | Vce | = 0.2V when saturated
- $\beta = 100$

V1	V2	V3	I1	I2	I3
1.4V	**0.7V**	**0.9V**	**36uA**	**901uA**	**90.1mA**

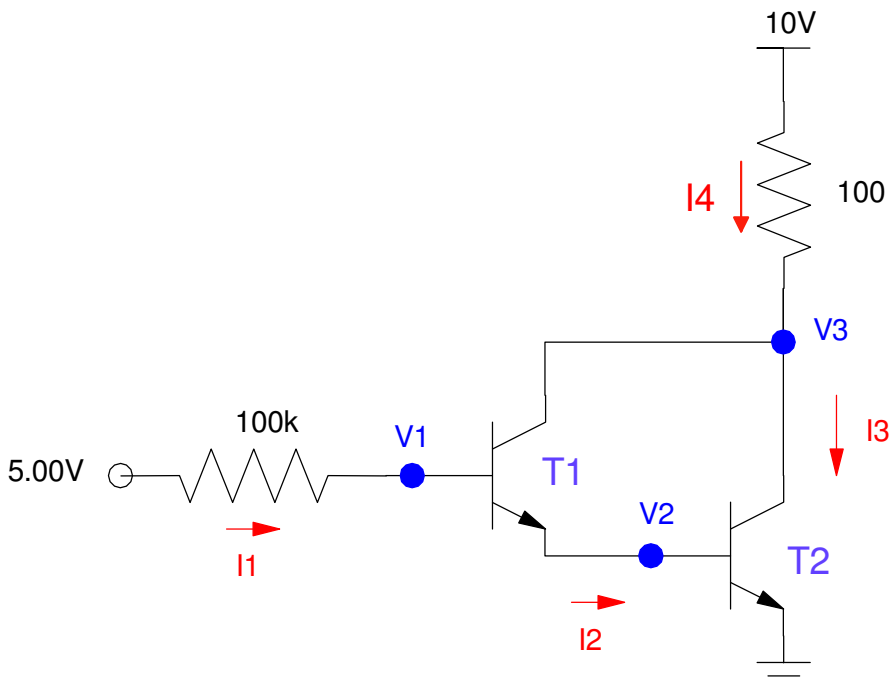

$$V_2 = 0.7V$$

$$V_1 = 1.4V$$

Assume T1 is saturated, T2 is on

$$V_3 = V_2 + 0.2V = 0.9V$$

$$I_1 = \left(\frac{5V - 1.4V}{100k}\right) = 36\mu A$$

$$I_4 = \left(\frac{10 - 0.9}{100}\right) = 91mA$$

$$I_1 + I_4 = I_2 + I_3 = I_2 + 100I_2 = 101I_2$$

$$I_2 = 901.3\mu A$$

$$I_3 = 90.13mA$$

4) Comparitor: Design a circuit which output

- 0V when R < 1500 Ohms
- 10V when R > 1500 Ohms

Assume a 1500 Ohm resistor

$$V_x = \left(\frac{1500}{1500+1500}\right) 10V = 5.00V$$

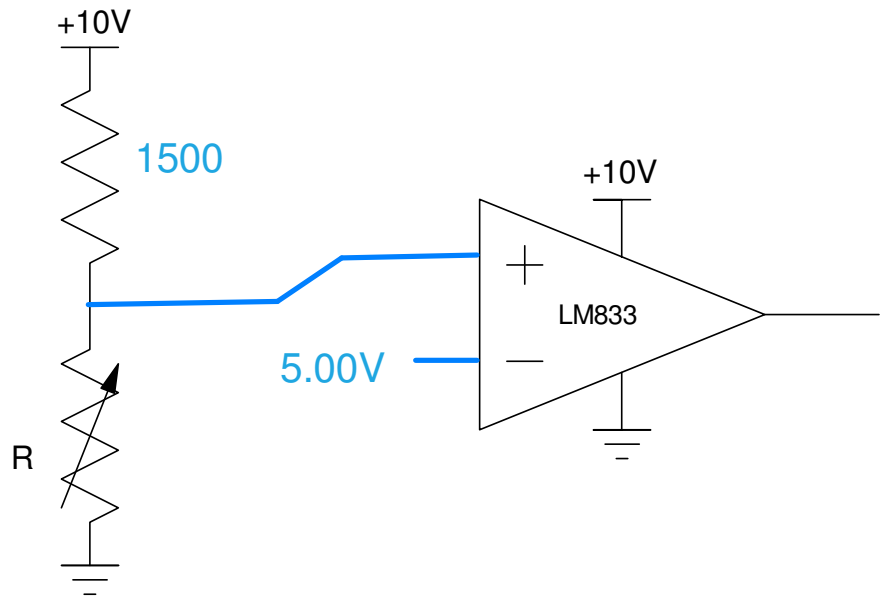

5) Schmitt Trigger: Design a circuit which output

- Y = 5V when R > 1500 Ohms
- Y = 0V when R < 1200 Ohms
- No change for 1200 < R < 1500 Ohms

Assume a 1500 Ohm resistor

When R = 1500 (2Y = 10V)

Vx = 5.00V

When R = 1200 (2Y = 0V)

Vx = 4.444V

$$gain = \left(\frac{10V - 0V}{5V - 4.444V}\right) = 18$$

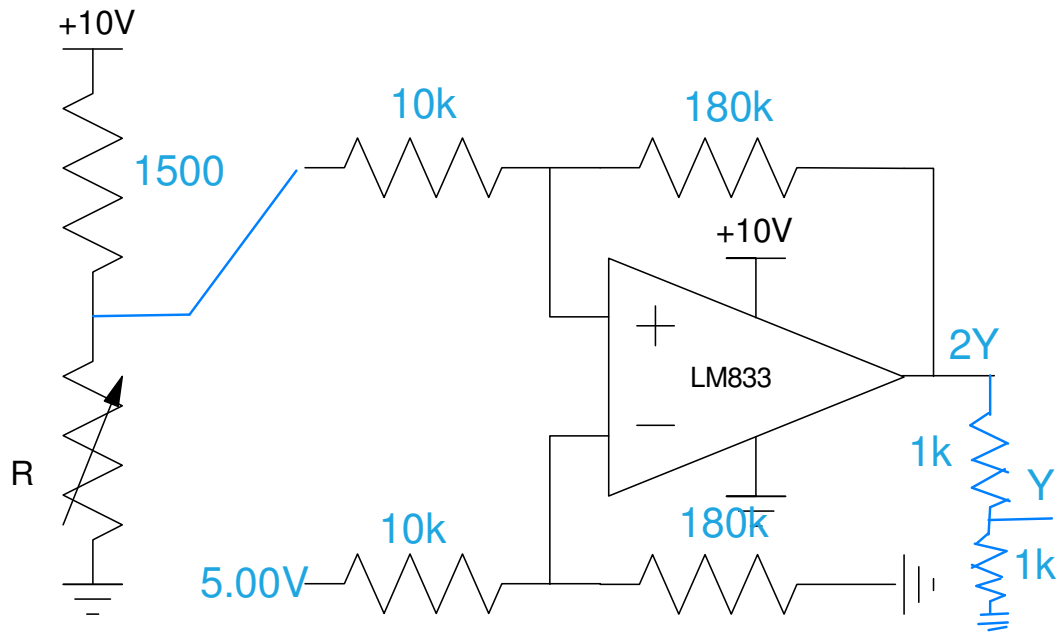

6) Schmitt Trigger: Analysis. Determine the voltages and resistance where the following Schmitt trigger turns on and off

On (V2 = +10V)		Off (V2 = 0V)	
V1	R	V1	R
6.00V	**6000 Ohms**	**6.4V**	**7111 Ohms**

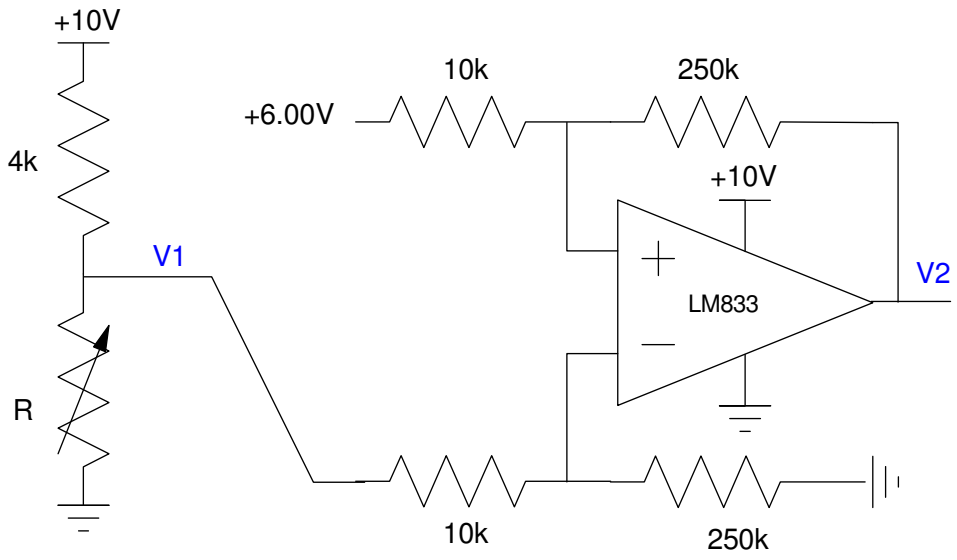

Bonus! Where is the error in the geometric proof that 64 = 65.

- Take an 8x8 square and cut it as shown on the left
- Rearrange it into the rectangle as shown on the right
- The area is now 65 (64 = 65)

There is a gap in the middle of the rectangles to the right. The gap has an area of 1.000