ECE 320 - Quiz #6 - Name _____

H Bridges, DC to DC Converters, Fourier Transforms - October 8, 2020

H-Bridge Analysis:

1) Determine the voltages and currents for the following H-bridge. Assume ideal 3904 & 3906 transistors:

- | Vbe | = 0.7V
- | Vce | = 0.2V when saturated
- Current gain = β = 100

I1	I2	I3	V4	V5
1.86mA	**93mA**	**930uA**	**9.8V**	**2.765V**

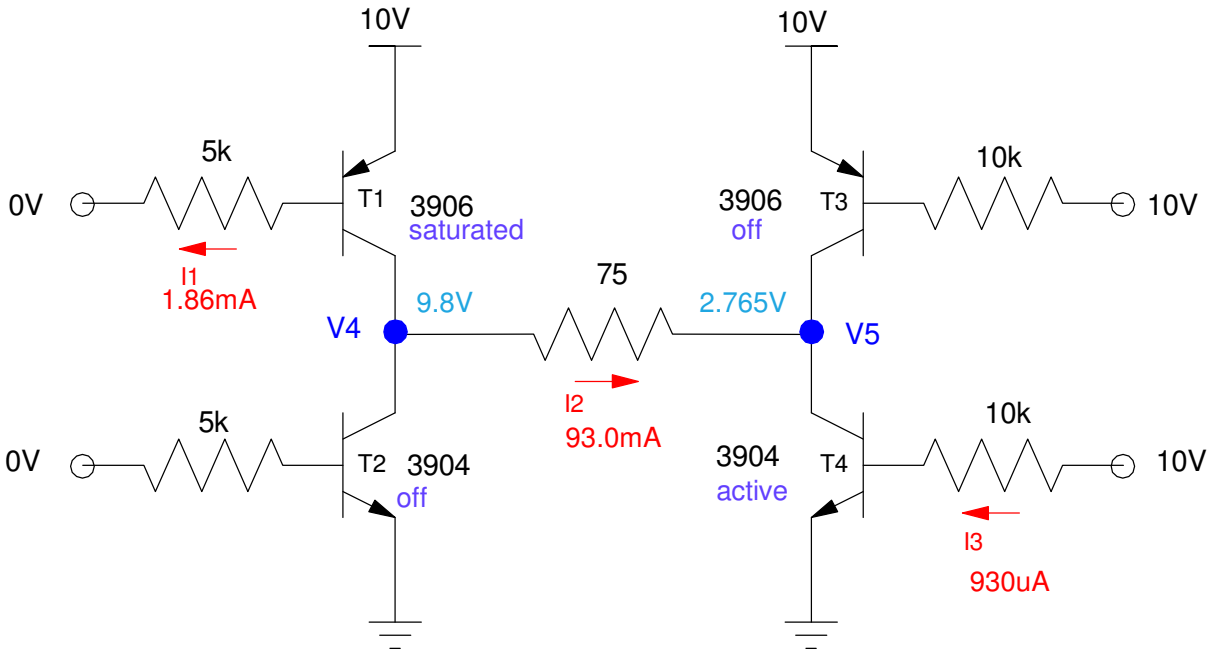

$$I_1 = \left(\frac{10-0.7}{5k}\right) = 1.860mA \qquad \beta I_1 = 186mA$$

$$I_3 = \left(\frac{10-0.7}{10k}\right) = 930\mu A \qquad \beta I_3 = 93.0mA$$

$$\max(I_2) = \left(\frac{10-0.2-0.2}{75}\right) = 128mA$$

The smallest current wins:

$$I_2 = 93.0mA$$

$$V_5 = 9.8V - 75\Omega \cdot 93mA = 2.765V$$

H-Bridge Analysis:

2) Determine the voltages and currents for the following H-bridge. Assume ideal 3904 & 3906 transistors:

- | Vbe | = 0.7V
- | Vce | = 0.2V when saturated
- Current gain = beta = 100

I1	I2	I3	V4	V5
18.6mA	**128mA**	**9.3mA**	**9.8V**	**0.2V**

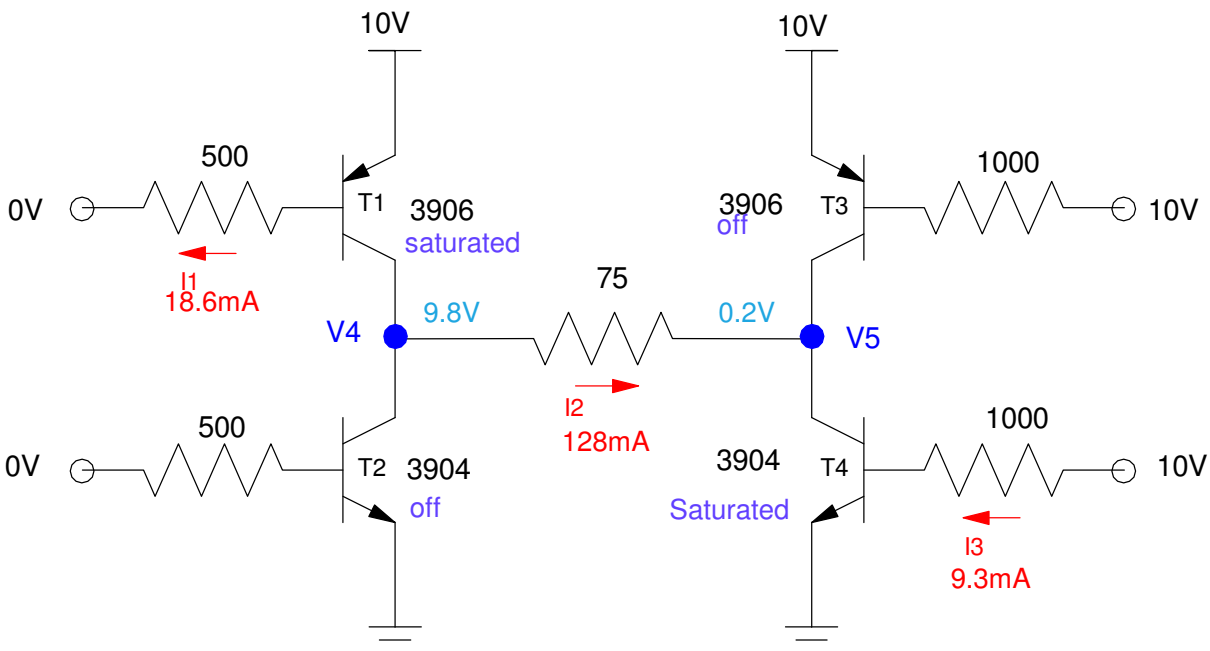

$$I_1 = \left(\frac{10-0.7}{500}\right) = 18.6mA \qquad \beta I_1 = 1.86A$$

$$I_3 = \left(\frac{10-0.7}{1000}\right) = 9.3mA \qquad \beta I_3 = 930mA$$

$$\max(I_2) = \left(\frac{10-0.2-0.2}{75}\right) = 128mA$$

The smallest current wins:

I2 = 128mA

Both transistor are saturated

DC to DC Converter: Analysis

3) Determine the voltages at V1 and V2 (both DC and AC)

V1		V2	
V1(DC)	V1(AC)	V2(DC)	V2(AC)
14.83V	**20.7Vpp**	**14.12V**	**1.304Vpp**

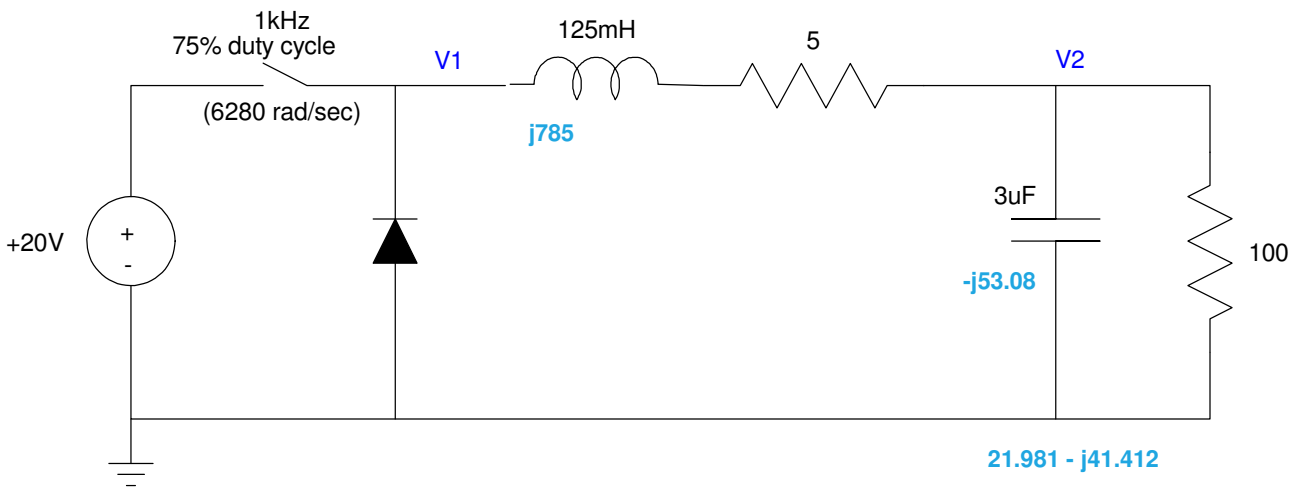

$$V_1(DC) = 0.75 \cdot 20V + 0.25 \cdot (-0.7V)$$

$$V_1(DC) = 14.83V$$

$$V_2(DC) = \left(\frac{100}{100+5}\right) 14.83V = 14.12V$$

$$V_1(AC) = 20.7V_{pp}$$

$$V_2(AC) = \left(\frac{(21.981-j41.412)}{(21.981-j41.412)+(5+j785)}\right) \cdot 20.7V_{pp}$$

$$V_2(AC) = 1.304V_{pp}$$

DC to DC Converter: Design

4) Determine the duty cycle, R, and C2 so that

- V2(DC) is 7.50V
- V2(AC) = 250mVpp, and
- I2 = 100mA

X% (duty cycle)	C	R
42.0%	**16.71uF**	**75 Ohms**

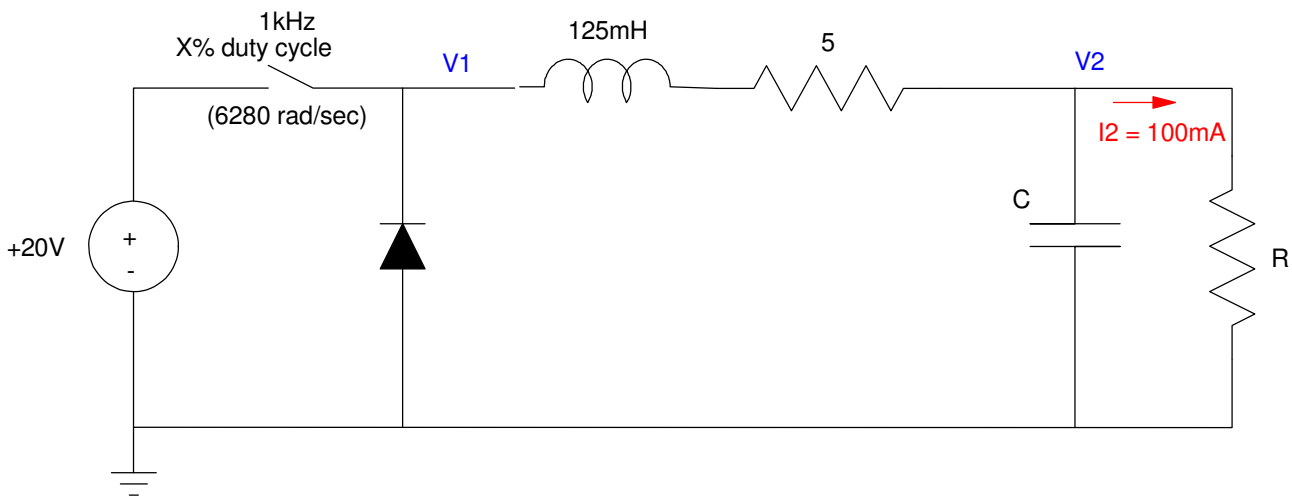

$$R = \left(\frac{7.50V}{100mA}\right) = 75\Omega$$

$$V_1 = \left(\frac{75+5}{75}\right) V_2 = 8.00V$$

$$X\% = \left(\frac{8.00V+0.7V}{20.00V+0.7V}\right) = \left(\frac{8.7}{20.7}\right) = 0.420$$

If C = 0

$$V_2(AC) = \left(\frac{75}{75+(5+j785)}\right) 20.7V_{pp} = 1.968V_{pp}$$

For 250mVpp

$$Z_c = \left(\frac{250mV_{pp}}{1.968V_{pp}}\right) 75\Omega = 9.53\Omega$$

$$\left|\frac{1}{j\omega C}\right| = 9.53\Omega$$

$$C = 16.71\mu F$$

Fourier Transform

5) Determine the period (T) of the following waveform

$$x(t) = x(t+T)$$

and it's Fourier transform

$$x(t) = 5 + 6\sin(3t) + 7\cos(4t)$$

The period of 3 rad/sec is

$$T_3 = \frac{2\pi}{3}$$

The period of 4 rad/sec is

$$T_4 = \frac{2\pi}{4}$$

The least common multiple is

$$T = 2\pi$$

The fundamental frequency is

$$\omega_0 = \frac{2\pi}{T} = 1\frac{rad}{\sec}$$

The Fourier transform is an expression of x(t) in terms of sinusoids

$$x(t) = 5 + 6\sin(3t) + 7\cos(4t)$$

You can also plot the function and see where it repeats

- It repeats every 2 pi seconds

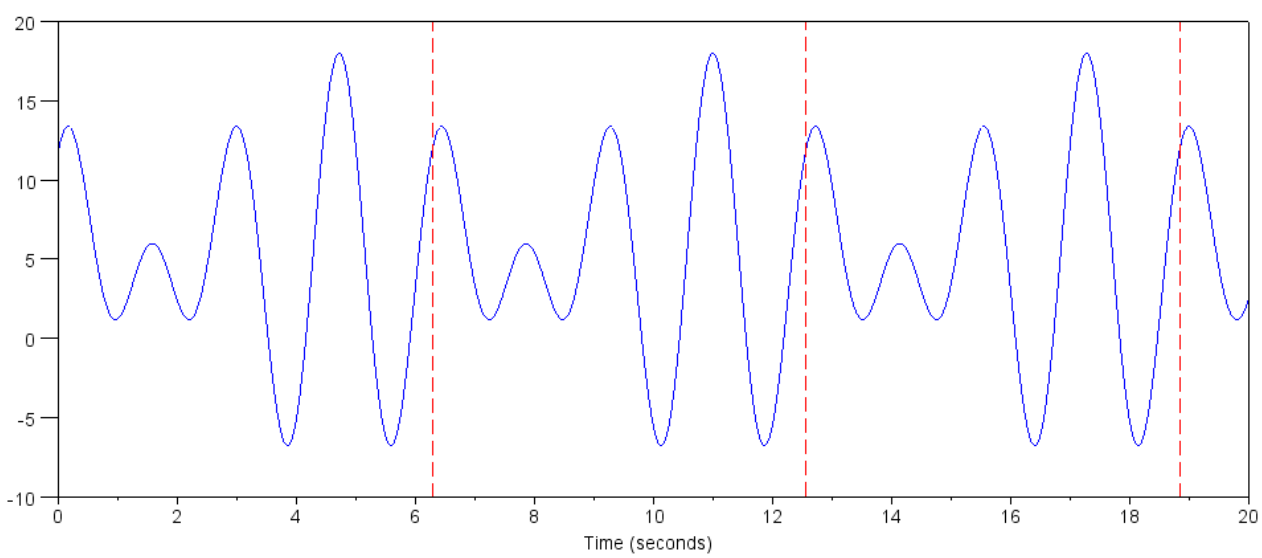

Fourier Transform

6) Determine y(t) given that

$$x(t) = 10 + 11\sin(3t) + 12\cos(6t)$$

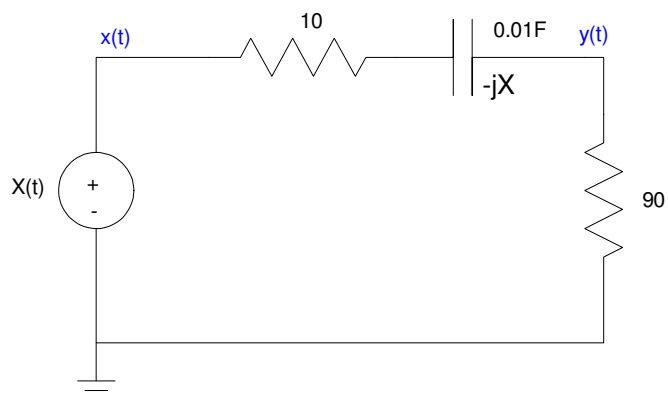

By voltage division

$$Y = \left(\frac{90}{90+10-jX}\right)X$$

DC:

$$C \rightarrow \frac{1}{j\omega C} = \infty$$

$$Y_0 = \left(\frac{90}{90+10-j\infty}\right)10 = 0$$

3 rad/sec

$$C \rightarrow \frac{1}{j\omega C} = -j33.333$$

$$X = 0 - j11$$

$$Y_3 = \left(\frac{90}{90+10-j33.3333}\right)(0 - j11) = 2.970 - j8.910$$

$$y_3(t) = 2.970\cos(3t) + 8.910\sin(3t)$$

6 rad/sec

$$C \rightarrow \frac{1}{j\omega C} = -j16.667$$

$$X = 12 + j0$$

$$Y_6 = \left(\frac{90}{90+10-j16.667}\right)(12 + j0) = 10.508 + j1.751$$

$$y_6(t) = 10.508\cos(6t) - 1.751\sin(6t)$$

$$\boxed{y(t) = 0 + 2.970\cos(3t) + 8.910\sin(3t) + 10.508\cos(6t) - 1.751\sin(6t)}$$

Bonus! What is the impedance Rab for the following circuit as the number of stages goes to infinity?

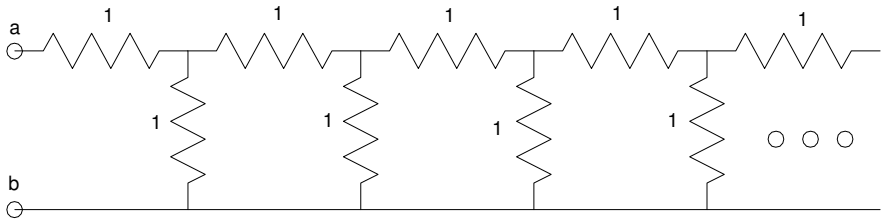

answer: The golden ratio, which is an irrational universal constant like π and e

1.619026

or more exactly (https://nerdparadise.com/math/reference/phi10000/)

ϕ = 1.6180339887 4989484820 4586834365 6381177203 0917980576 2862135448 6227052604 6281890244
9707207204 1893911374 8475408807 5386891752 1266338622 2353693179 3180060766 7263544333
8908659593 9582905638 3226613199 2829026788 0675208766 8925017116 9620703222 1043216269
5486262963 1361443814 9758701220 3408058879 5445474924 6185695364 8644492410 4432077134
4947049565 8467885098 7433944221 2544877066 4780915884 6074998871 2400765217 0575179788
3416625624 9407589069 7040002812 1042762177 1117778053 1531714101 1704666599 1466979873
1761356006 7087480710 1317952368 9427521948 4353056783 0022878569 9782977834 7845878228
9110976250 0302696156 1700250464 3382437764 8610283831 2683303724 2926752631 1653392473
1671112115 8818638513 3162038400 5222165791 2866752946 5490681131 7159934323 5973494985
0904094762 1322298101 7261070596 1164562990 9816290555 2085247903 5240602017 2799747175
3427775927 7862561943 2082750513 1218156285 5122248093 9471234145 1702237358 0577278616
0086883829 5230459264 7878017889 9219902707 7690389532 1968198615 1437803149 9741106926
0886742962 2675756052 3172777520 3536139362 1076738937 6455606060 5921658946 6759551900
4005559089 5022953094 2312482355 2122124154 4400647034 0565734797 6639723949 4994658457
8873039623 0903750339 9385621024 2369025138 6804145779 9569812244 5747178034 1731264532
2041639723 2134044449 4873023154 1767689375 2103068737 8803441700 9395440962 7955898678
7232095124 2689355730 9704509595 6844017555 1988192180 2064052905 5189349475 9260073485
2282101088 1946445442 2231889131 9294689622 0023014437 7026992300 7803085261 1807545192
8877050210 9684249362 7135925187 6077788466 5836150238 9134933331 2231053392 3213624319
2637289106 7050339928 2265263556 2090297986 4247275977 2565508615 4875435748 2647181414
5127000602 3890162077 7322449943 5308899909 5016803281 1219432048 1964387675 8633147985
7191139781 5397807476 1507722117 5082694586 3932045652 0989698555 6781410696 8372884058
7461033781 0544439094 3683583581 3811311689 9385557697 5484149144 5341509129 5407005019
4775486163 0754226417 2939468036 7319805861 8339183285 9913039607 2014455950 4497792120
7612478564 5916160837 0594987860 0697018940 9886400764 4361709334 1727091914 3365013715
7660114803 8143062623 8051432117 3481510055 9013456101 1800790506 3814215270 9308588092
8757034505 0780814545 8819906336 1298279814 1174533927 3120809289 7279222132 9806429468
7824274874 0174505540 6778757083 2373109759 1511776297 8443284747 9081765180 9778726841
6117632503 8612112914 3683437670 2350371116 3307258698 8325871033 6322238109 8090121101
9899176841 4917512331 3401527338 4383723450 0934786049 7929459915 8220125810 4598230925