ECE 320 - Quiz #6 - Name _____

H Bridges, DC to DC Converters, Fourier Transforms - October 8, 2020

H-Bridge Analysis:

1) Determine the voltages and currents for the following H-bridge. Assume ideal 3904 & 3906 transistors:

- | Vbe | = 0.7V
- | Vce | = 0.2V when saturated
- Current gain = β = 100

I1	I2	I3	V4	V5

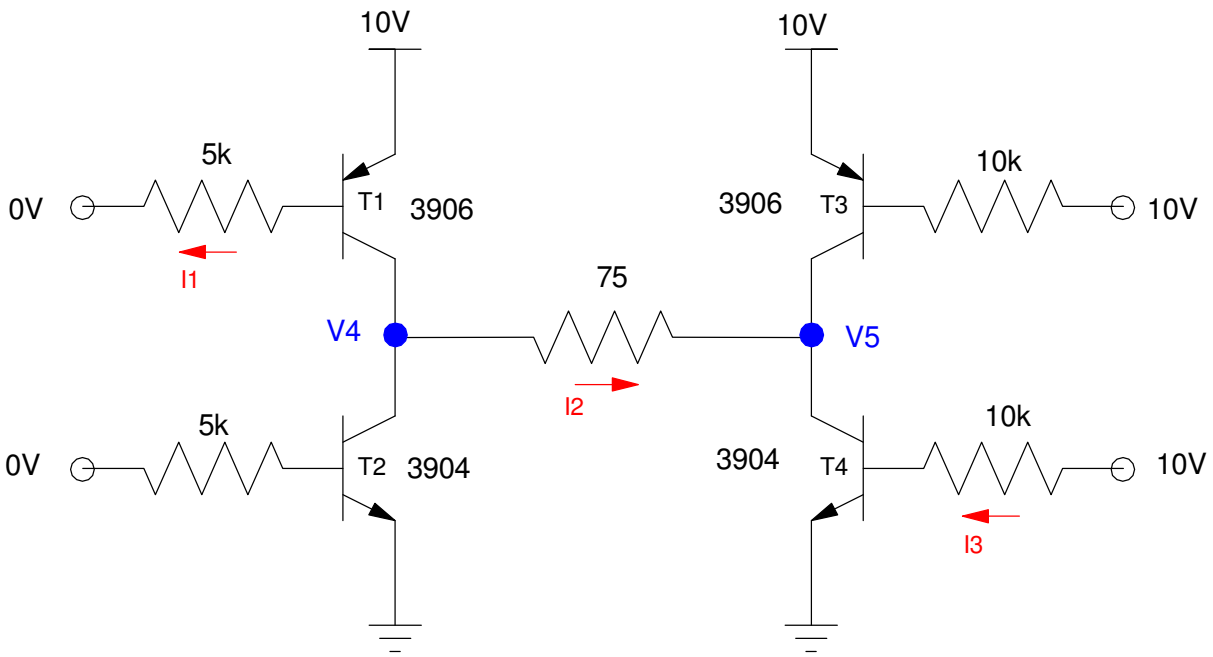

H-Bridge Analysis:

2) Determine the voltages and currents for the following H-bridge. Assume ideal 3904 & 3906 transistors:

- | Vbe | = 0.7V
- | Vce | = 0.2V when saturated
- Current gain = beta = 100

I1	I2	I3	V4	V5

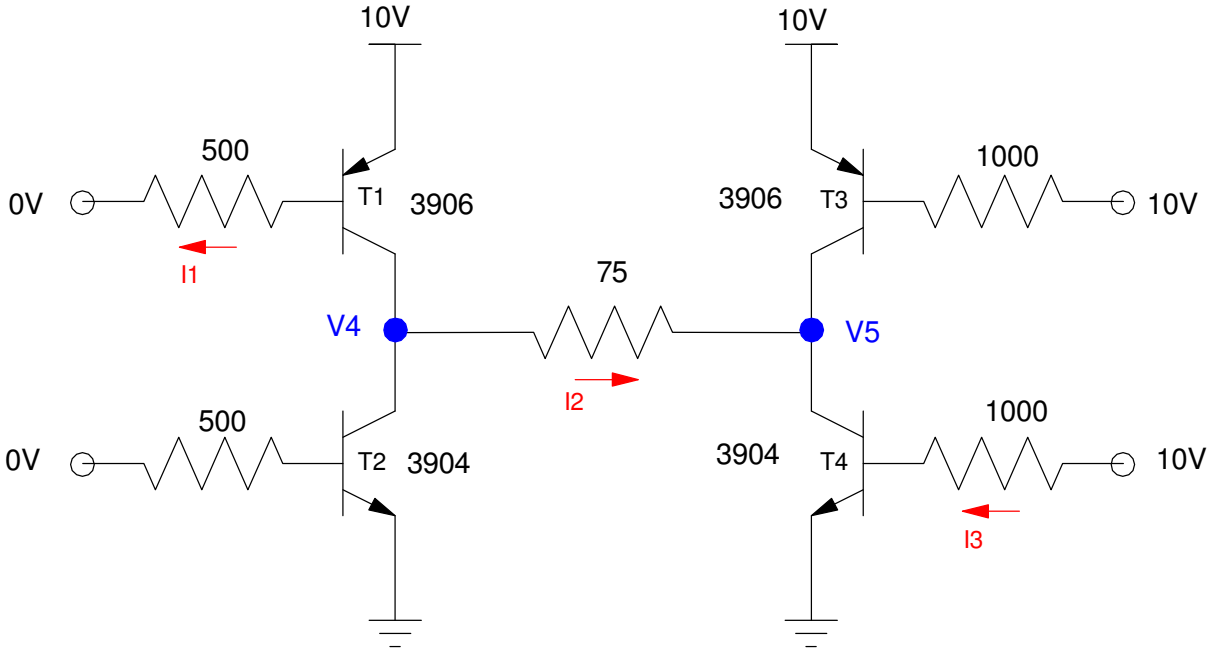

DC to DC Converter: Analysis

3) Determine the voltages at V1 and V2 (both DC and AC)

V1		V2	
V1(DC)	V1(AC)	V2(DC)	V2(AC)

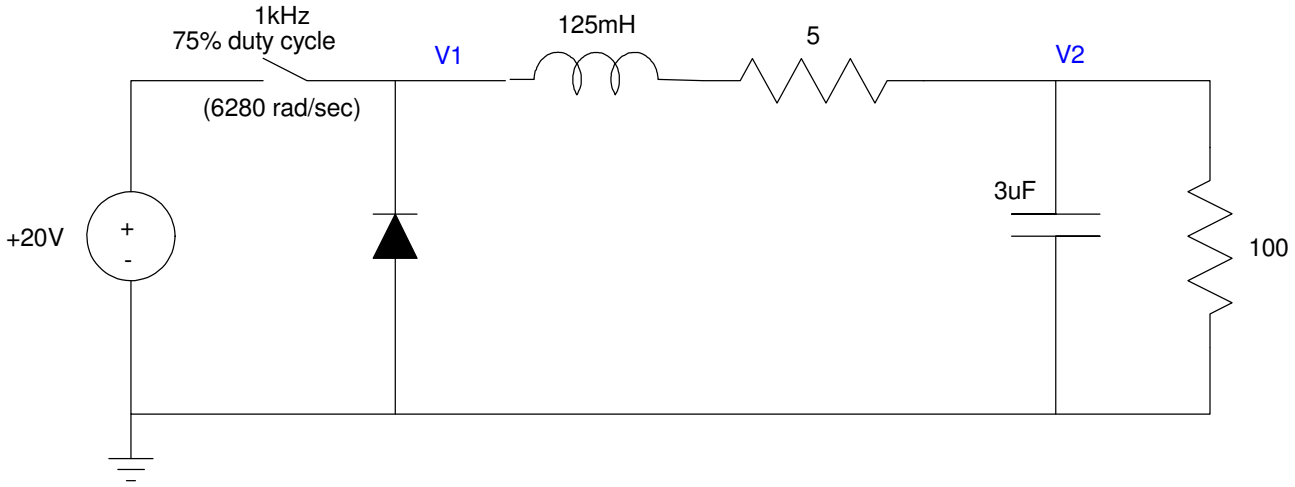

DC to DC Converter: Design

4) Determine the duty cycle, R, and C2 so that

- V2(DC) is 7.50V
- V2(AC) = 250mVpp, and
- I2 = 100mA

X% (duty cycle)	C	R

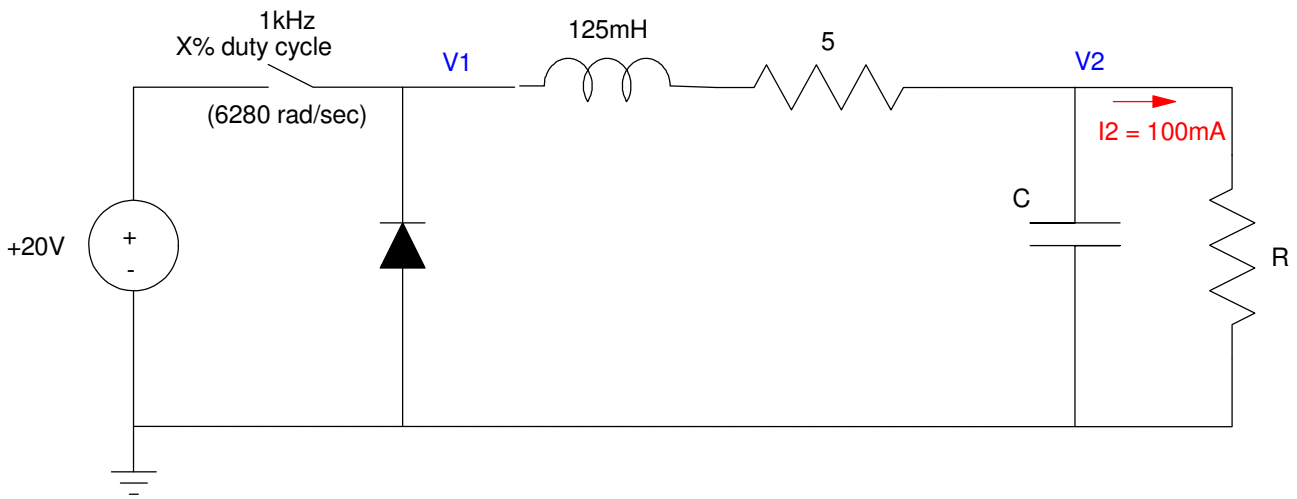

Fourier Transform

5) Determine the period (T) of the following waveform

$$x(t) = x(t + T)$$

and it's Fourier transform

$$x(t) = 5 + 6\sin(3t) + 7\cos(4t)$$

Fourier Transform

6) Determine y(t) given that

$$x(t) = 10 + 11\sin(3t) + 12\cos(6t)$$

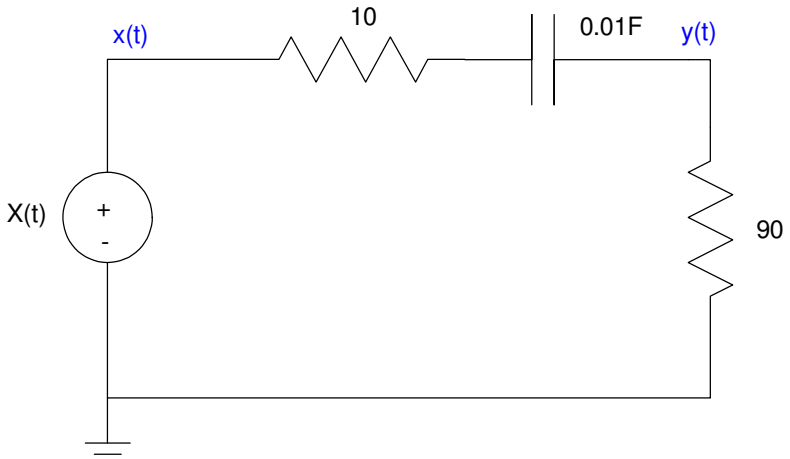

Bonus! What is the impedance Rab for the following circuit as the number of stages goes to infinity?