ECE 320 - Quiz #7 - Name _____

DC to AC, SCR, Boolean Logic. October 15, 2020

DC to DC Converter

1) A DC to AC converter converts 20VDC into a 20Vp, 400Hz AC sine wave. A 1:4 step-up transformer then converts this into an 80Vp, 400Hz sine wave (V0).

Determine the resulting votlage at V1 and V2 for this DC to DC converter.

V1		V2	
V1(DC)	V1(AC)	V2(DC)	V2(AC)

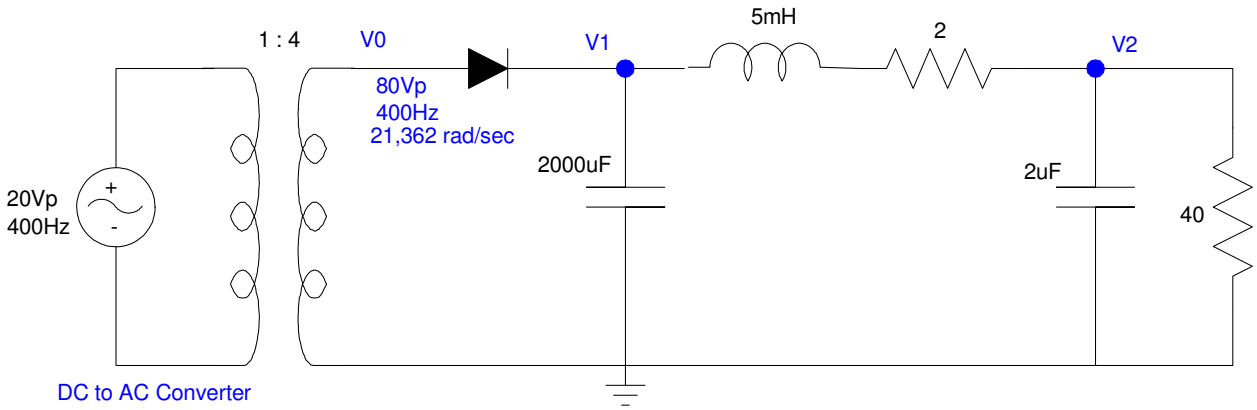

2) Determine the differential equations which describe the following circuit. The differential equations should be in terms of {V1, V2, I3}. Assume the VI relationship of the diode is

$$V_d = 0.052 \ln(10^8 I_d + 1) \qquad I_d = 10^{-8}\left(\exp\left(\frac{V_d}{0.052}\right) - 1\right)$$

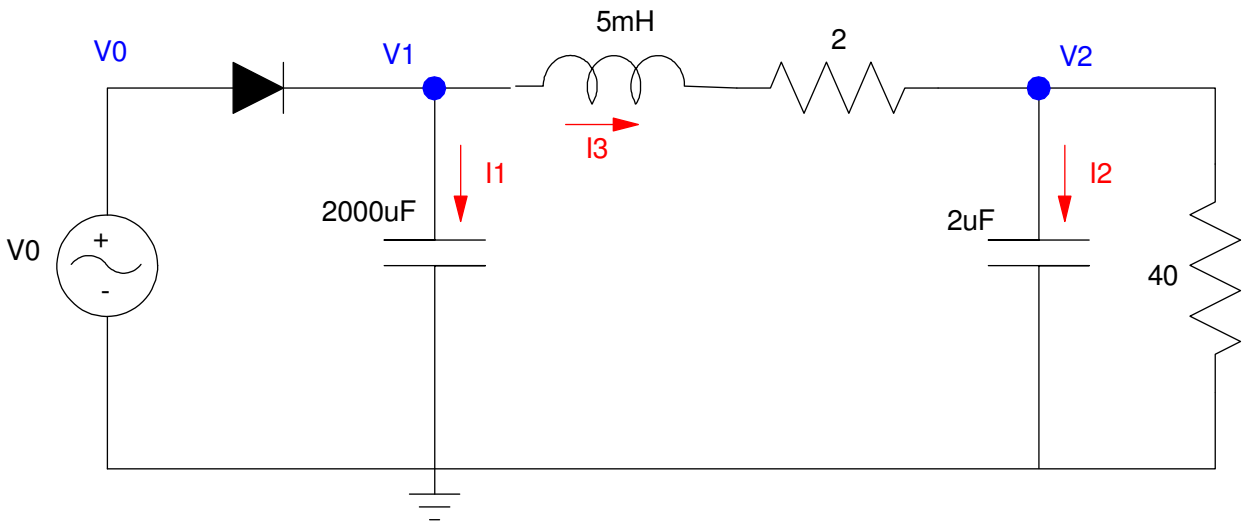

SCR (5 diode version)

3) SCR: Analysis. Determine the votlages at V1 and V2 (both DC). Assume a firing angle of 30 degrees.

V1		V2	
V1(DC)	V1(AC)	V2(DC)	V2(AC)

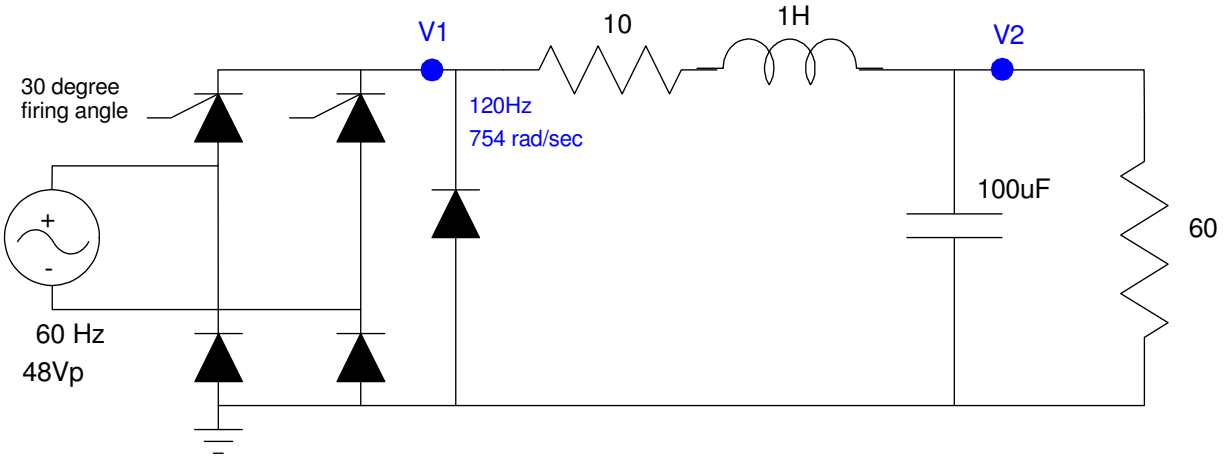

4) SCR Design. Determine the firing angle, R, and C so that

- V2(DC) = 10.0V
- I(R) = 200mA
- V2(AC) = 200mVpp

V1(DC)	Firing Angle	C	R

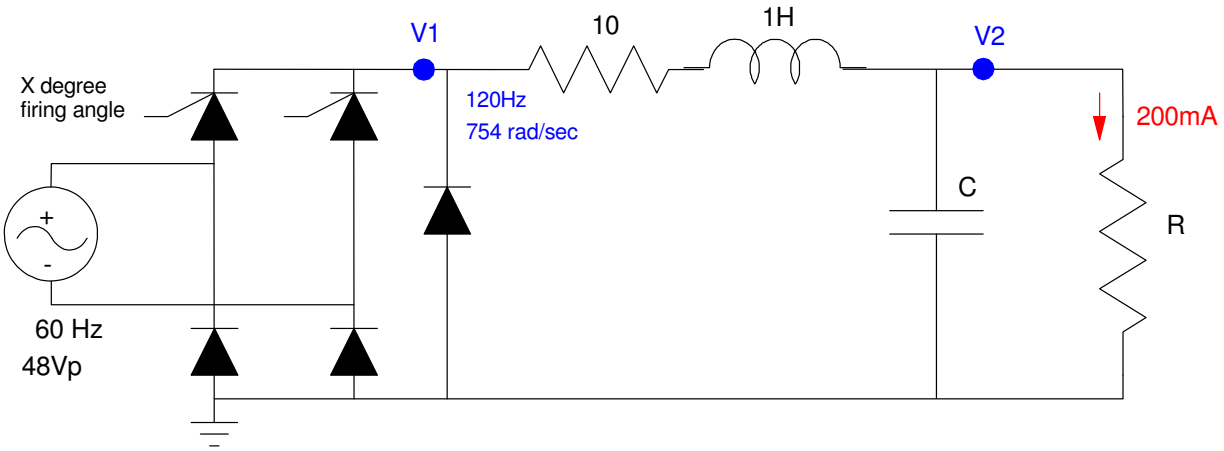

5) Design a circuit using NAND gates to implement the following logic (i.e. circle the ones)

X = ABCD

Y = (X < 13)

AB \ CD	00	01	11	10
00	1	1	1	1
01	1	1	1	1
11	1	0	0	0
10	1	1	1	1

6) Design a circuit using NOR gates to implement the following logic (i.e. circle the zeros)

X = ABCD

Y = (X < 13)

AB \ CD	00	01	11	10
00	1	1	1	1
01	1	1	1	1
11	1	0	0	0
10	1	1	1	1