ECE 320 - Homework #1

EE 206 Review, Phasors. Due Monday, August 31st

Please make the subject "ECE 320 HW#1" if submitting homework electronically to Jacob_Glower@yahoo.com (or on blackboard)

Resistors in series and parallel

1) Assume X = infinity (DC analysis). Determine the resistance Rab

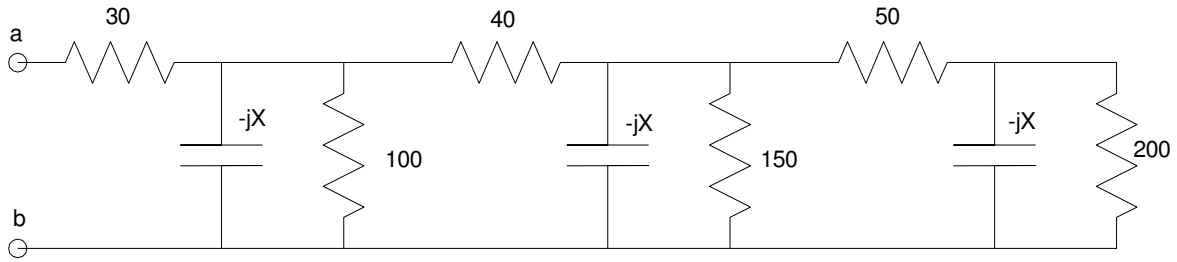

200 + 50 = 250

250 || 150 = 93.75

93.75 + 40 = 133.75

133.85 || 100 = 57.219

57.219 + 30 = 87.219

answer: Rab = 87.219 Ohms

2) Assume -jX = -j100. Determine the resistance Rab (it will be a complex number)

200 || -j100 = 40 - j80

(40 - j80) + 50 = 90 - j80

(90 - j80) || 150 || -j100 = 31.668 - j38.172

(31.668 - j38.172) + 40 = 71.668 - j38.172

(71.668 - j38.172) || 100 || -j100 = 30.473 - j23.055

(30.473 - 23.055) + 30 = 60.473 - j23.055

answer: Rab = 60.473 - j23.055

Problem 1 & 2

Voltage Nodes & Current Loops

3) (Voltage Nodes): For the following circuit

- a) Write the voltage node equations
- b) Solve using Matlab (or similar program)
- c) Check your answers in CircuitLab (or similar circuit simulator)

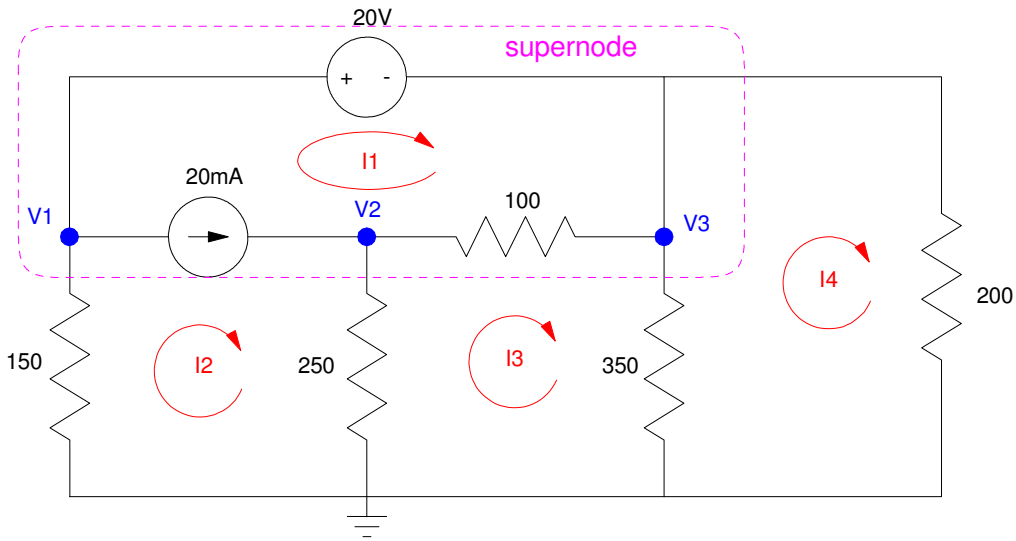

a)
$$V_1 - V_3 = 20$$
$$-0.02 + \left(\frac{V_2}{250}\right) + \left(\frac{V_2 - V_3}{100}\right) = 0$$
$$\left(\frac{V_1}{150}\right) + \left(\frac{V_2}{250}\right) + \left(\frac{V_3}{350}\right) + \left(\frac{V_3}{200}\right) = 0$$

b) Group terms

$$V_1 - V_3 = 20$$
$$\left(\frac{1}{250} + \frac{1}{100}\right) V_2 - \left(\frac{1}{100}\right) V_3 = 0.02$$
$$\left(\frac{1}{150}\right) V_1 + \left(\frac{1}{250}\right) V_2 + \left(\frac{1}{350} + \frac{1}{200}\right) V_3 = 0$$

and place in matrix form

$$\begin{bmatrix} 1 & 0 & -1 \\ 0 & \left(\frac{1}{250} + \frac{1}{100}\right) & \left(\frac{-1}{100}\right) \\ \left(\frac{1}{150}\right) & \left(\frac{1}{250}\right) & \left(\frac{1}{350} + \frac{1}{200}\right) \end{bmatrix} \begin{bmatrix} V_1 \\ V_2 \\ V_3 \end{bmatrix} = \begin{bmatrix} 20 \\ 0.02 \\ 0 \end{bmatrix}$$

Solve using Matlab

```
>> A = [1,0,-1 ; 0,1/250+1/100,-1/100 ; 1/150,1/250,1/350+1/200]

A =

    1.0000         0   -1.0000
         0    0.0140   -0.0100
    0.0067    0.0040    0.0079

>> B = [20;0.02;0]

B =

   20.0000
    0.0200
         0

>> V = inv(A)*B

V =

   12.0000
   -4.2857
   -8.0000
```

c) Check your answers in CircuitLab (or similar circuit simulator)

- Same answers

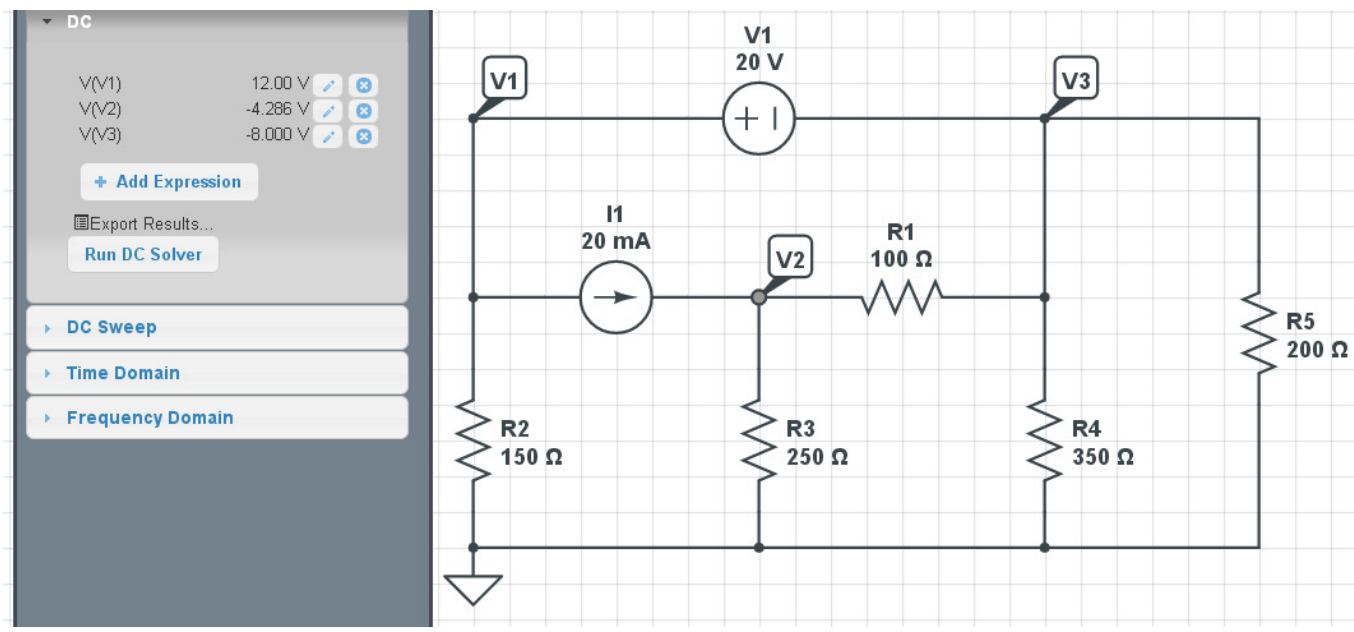

4) (Current Loops) For the following circuit

- a) Write the current loop equations
- b) Solve using Matlab (or similar program)
- c) Check your answers in CircuitLab (or similar circuit simulator)

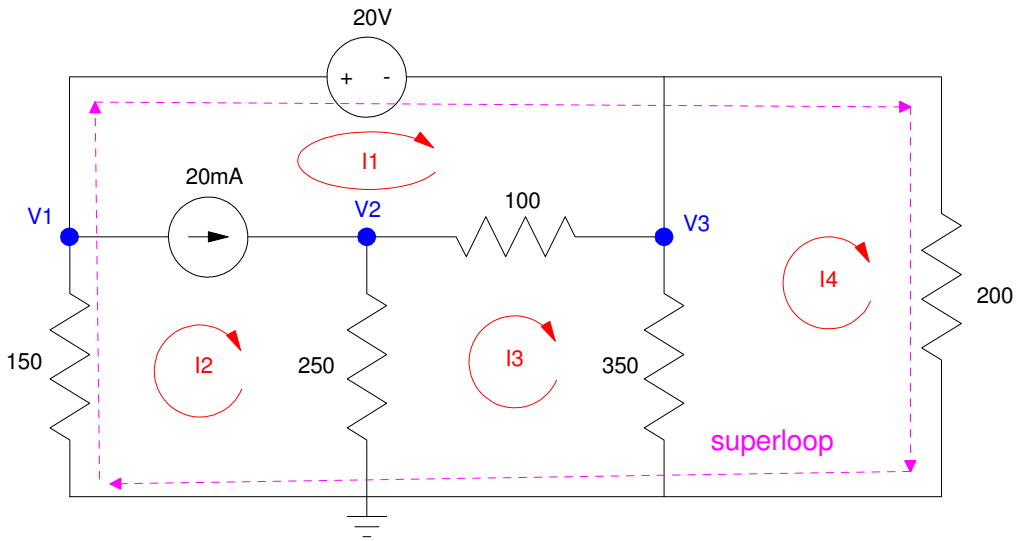

a) Write the current loop equations

$$I_2 - I_1 = 0.02$$

$$250(I_3 - I_2) + 100(I_3 - I_1) + 350(I_3 - I_4) = 0$$

$$350(I_4 - I_3) + 200I_4 = 0$$

$$150I_2 + 20 + 200I_4 = 0$$

b) Solve using Matlab (or similar program)

Group terms

$$I_2 - I_1 = 0.02$$

$$-100I_1 - 250I_2 + 700I_3 - 350I_4 = 0$$

$$-350I_3 + 550I_4 = 0$$

$$150I_2 + 200I_4 = -20$$

Place in matrix form

$$\begin{bmatrix} -1 & 1 & 0 & 0 \\ -100 & -250 & 700 & -350 \\ 0 & 0 & -350 & 550 \\ 0 & 150 & 0 & 200 \end{bmatrix} \begin{bmatrix} I_1 \\ I_2 \\ I_3 \\ I_4 \end{bmatrix} = \begin{bmatrix} 0.02 \\ 0 \\ 0 \\ -20 \end{bmatrix}$$

Solve with Matlab

```
>> A = [-1,1,0,0 ; -100,-250,700,-350 ; 0,0,-350,550 ; 0,150,0,200]

    -1     1     0     0
  -100  -250   700  -350
     0     0  -350   550
     0   150     0   200

>> B = [0.02;0;0;-20]

    0.0200
         0
         0
  -20.0000

>> I = inv(A)*B

   -0.1000
   -0.0800
   -0.0629
   -0.0400

>>
```

c) Check your answers in CircuitLab (or similar circuit simulator)

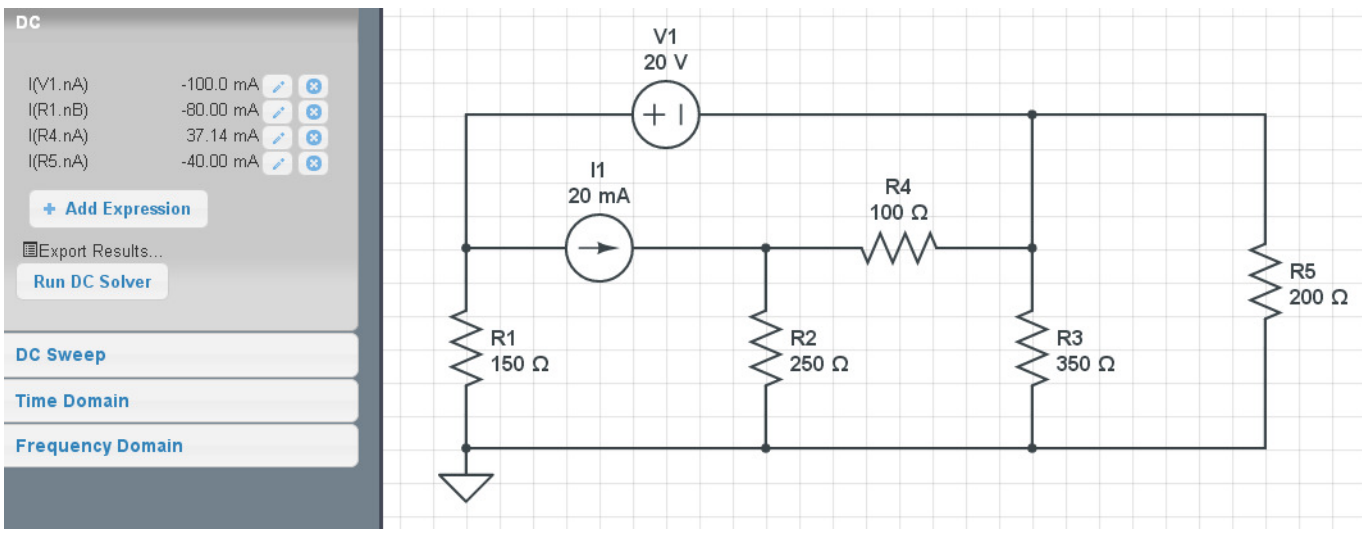

5) Find the Thevenin equivalent for the following circuit

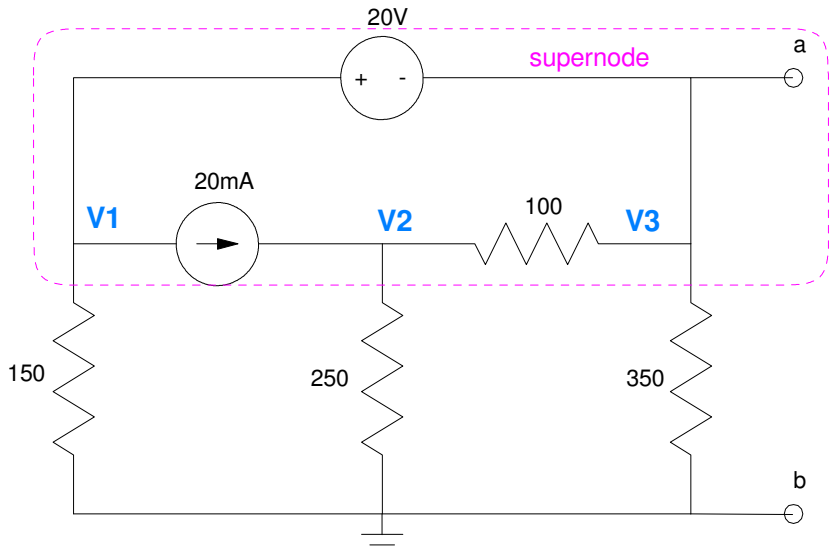

Problem 5

Rth: Set the sources to zero and solve for Rab

Rab = 150 || 350 || 350 = 80.769 Ohms

Vth: Comupte the open-circuti voltage. Use voltage nodes (same ciruit as before with I4 = 0)

$$V_1 - V_3 = 20$$

$$-0.02 + \left(\frac{V_2}{250}\right) + \left(\frac{V_2 - V_3}{100}\right) = 0$$

$$\left(\frac{V_1}{150}\right) + \left(\frac{V_2}{250}\right) + \left(\frac{V_3}{350}\right) = 0$$

Group terms and place in matrix form

$$\begin{bmatrix} 1 & 0 & -1 \\ 0 & \left(\frac{1}{250} + \frac{1}{100}\right) & \left(\frac{-1}{100}\right) \\ \left(\frac{1}{150}\right) & \left(\frac{1}{250}\right) & \left(\frac{1}{350}\right) \end{bmatrix} \begin{bmatrix} V_1 \\ V_2 \\ V_3 \end{bmatrix} = \begin{bmatrix} 20 \\ 0.02 \\ 0 \end{bmatrix}$$

```
>> A = [1,0,-1 ; 0,1/250+1/100,-1/100 ; 1/150,1/250,1/350]

A =

    1.0000         0   -1.0000
         0    0.0140   -0.0100
    0.0067    0.0040    0.0029
```

```
>> B = [20;0.02;0]

B =

   20.0000
    0.0200
         0

>> V = inv(A)*B

V =

    8.7692
   -6.5934
  -11.2308
```

V3 = Vth = -11.23V

Solution:

Vth = -11.23V

Rth = 80.769 Ohms

6) Assume Vin contains a DC and 500 rad/sec (79.57Hz) signal:

$$V_{in} = 10 + 3\sin(500t)$$

- a) Determine the impedances of the inductor, capacitor, and resistor at DC and 500 rad/sec
- b) Determine the voltage, V2, using phasor analysis
- c) Check your answer using PartSim (or similar program)

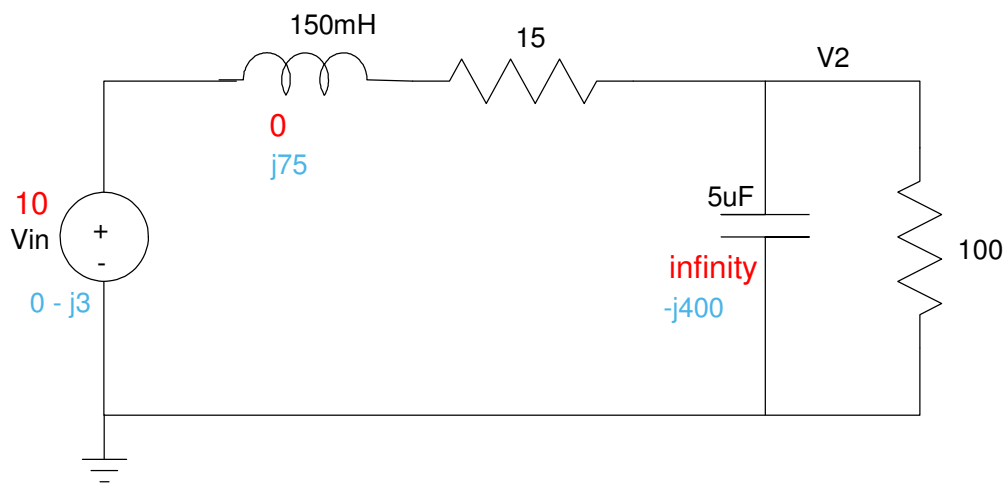

Problem 6

DC (red)

$$V_2 = \left(\frac{100}{100+15}\right)10 = 8.696V$$

AC (blue)

$$100 \,||\, -j400 = 94.118 - j23.529$$

$$V_2 = \left(\frac{(94.118-j23.529)}{(94.118-j23.529)+(15+j75)}\right)(0-j3)$$

$$V_2 = -1.528 - j1.867$$

$$v_2(t) = -1.528\cos(500t) + 1.867\sin(500t)$$

Total answer is DC + AC

$$v_2(t) = 8.696 - 1.528\cos(500t) + 1.867\sin(500t)$$

In CircuitLab

- Run a time-domain simulation
- V1 = 10V (DC) 3V (AC) at 79.58Hz (2 pi f = 500)
- A period is 13ms. Run the simulation for a couple periods (50ms)
- Make the time step 1000x smaller for 1000 points on the plot