# ECE 320 - Homework #6

H-Bridge, DC to DC Converters, Fourier Transforms. Due Monday, October 5th

## H-Bridges:

1) Determine the voltages and currents for the following 1/2 H-bridge for

- V1 = 0V, V2 = 0V
- V1 = 5V, V2 = 5V
- V1 = 5V, V2 = 0V

Assume 3904/3906 transistors

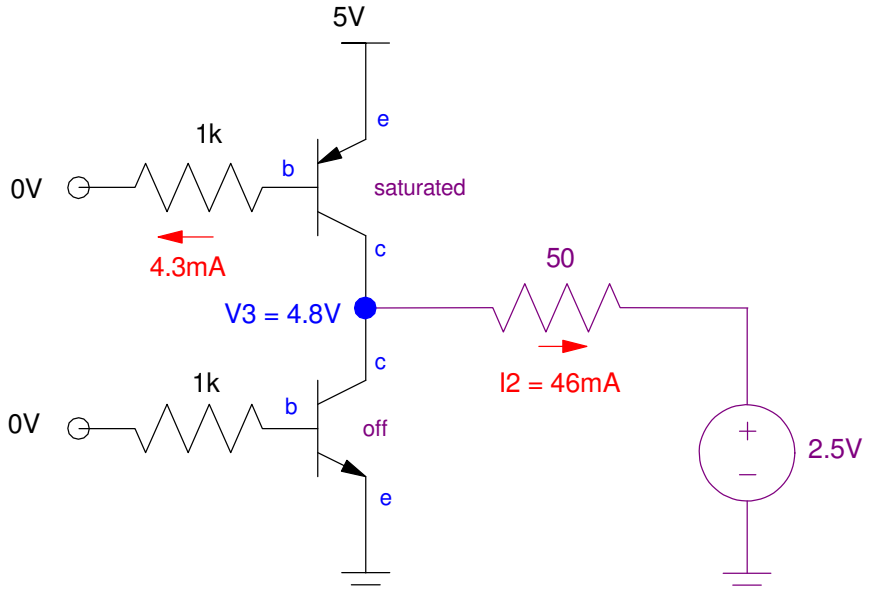


0V : 0V results in V2 = 4.8V

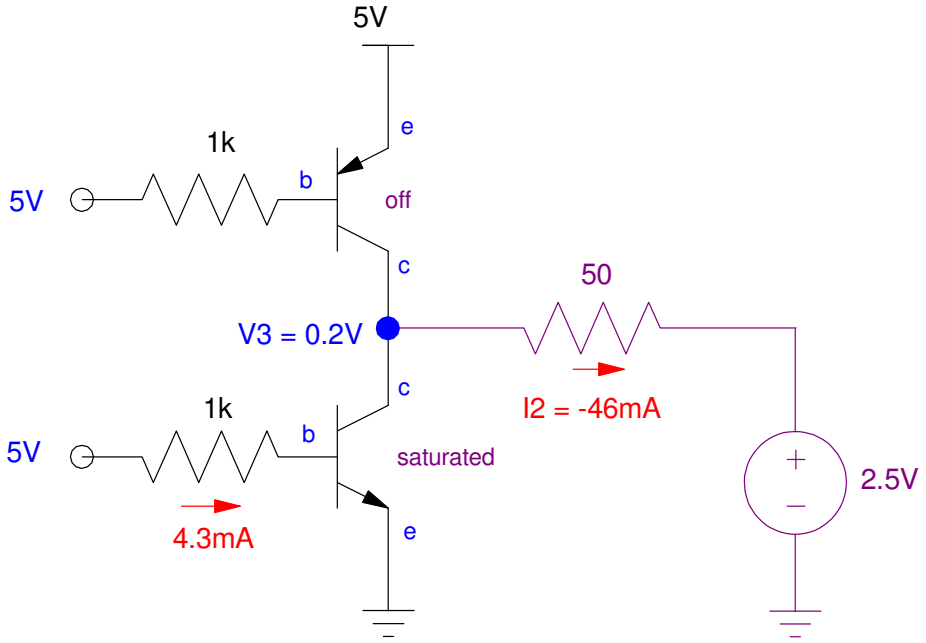


5V : 5V results in 0.2V

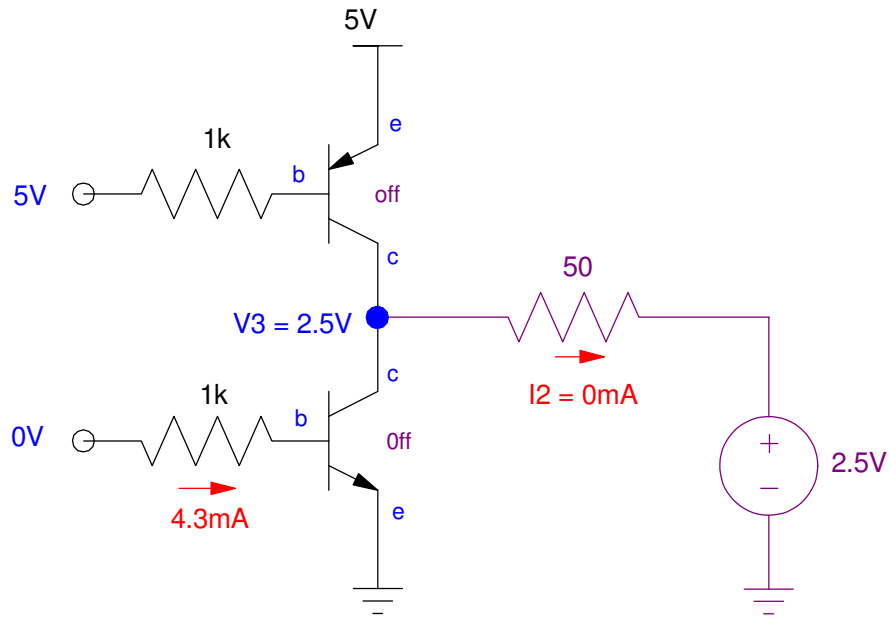


Voltages for 5V : 0V input

2) Check your results (votlages and currents) in CircuitLab

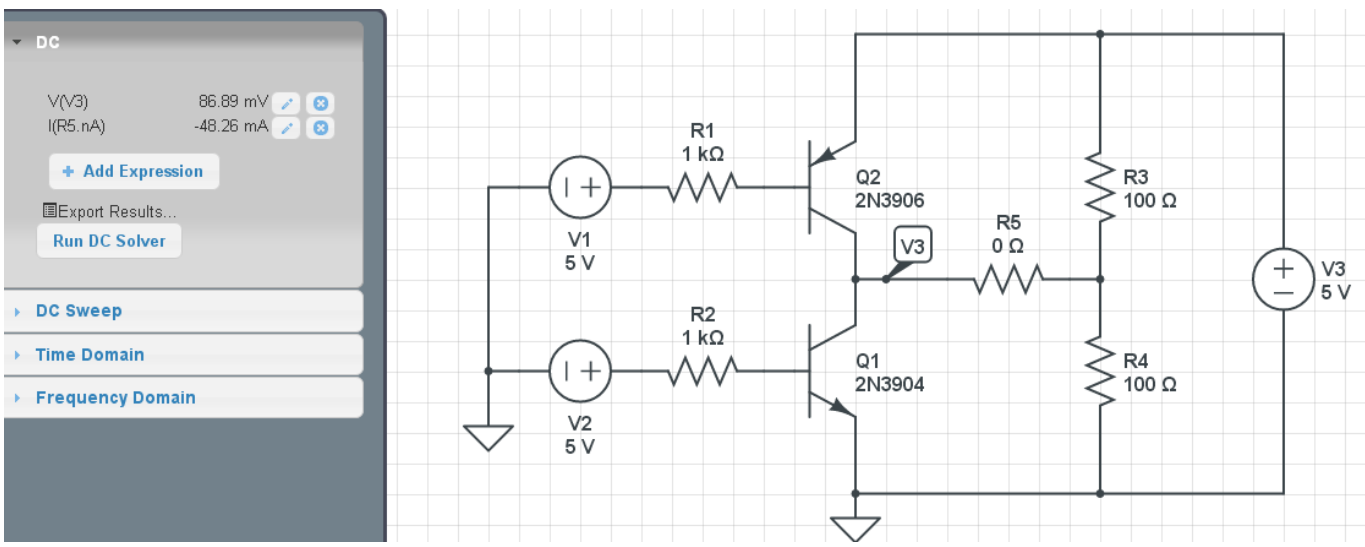


| | | Calculated | Simulated | Measured |
|---|---|---|---|---|
| V1 = 5V<br>V2 = 5V | V3 | 0.20V | 86.89mV | |
| | I3 | -46.0mA | -48.26mA | |
| V1 = 0V<br>V2 = 0V | V3 | 4.80V | 4.884V | |
| | I3 | +46.0mA | +46.87mA | |
| V1 = 5V<br>V2 = 0V | V3 | 2.50V | 2.500V | |
| | I3 | 0.0mA | 0.0mA | |

**3) Lab:** Build this circuit and measure the voltages and currents. (note: it's OK to compute the currents from the measured votlages).

| | | Calculated | Simulated | Measured |
|---|---|---|---|---|
| V1 = 5V<br>V2 = 5V | V3 | 0.20V | 86.89mV | 0.09V |
| | I2 | -46.0mA | -48.26mA | -48mA |
| V1 = 0V<br>V2 = 0V | V3 | 4.80V | 4.884V | 4.96V |
| | I2 | +46.0mA | +46.87mA | +49mA |
| V1 = 5V<br>V2 = 0V | V3 | 2.50V | 2.500V | 2.46V |
| | I2 | 0.0mA | 0.0mA | -1mA |

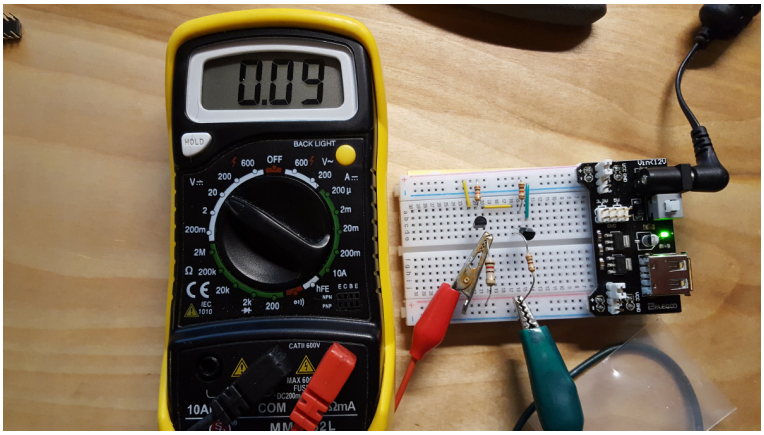


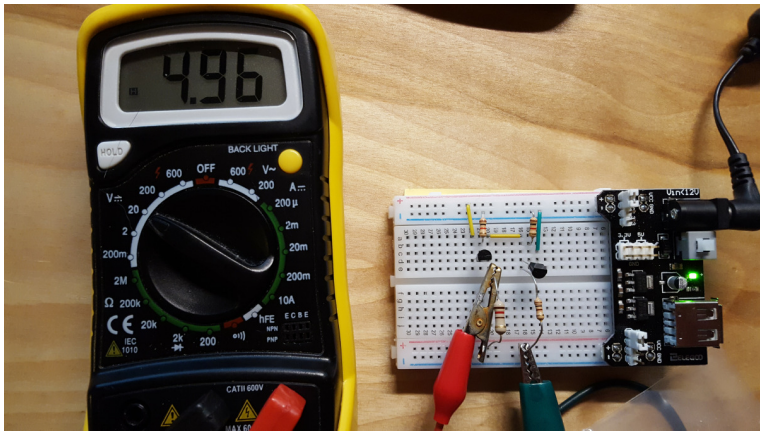

## DC to DC Converters

4) Determine the voltages (both DC and AC) for V1 and V2.

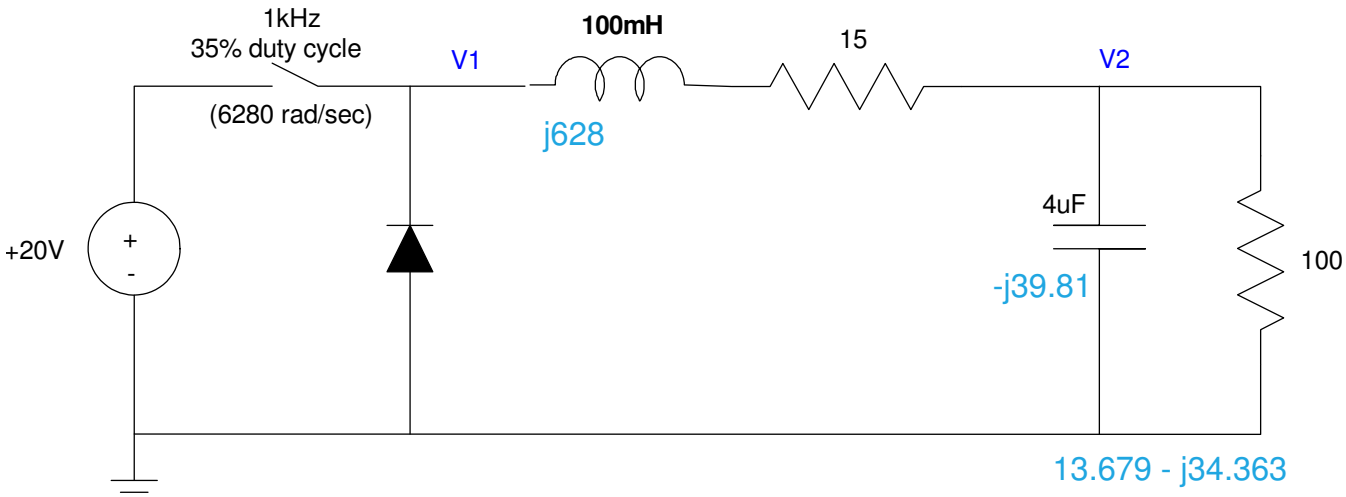


DC

$$V_1(DC) = 0.35 \cdot (+20V) + 0.65 \cdot (-0.70V)$$

$$V_1(DC) = 6.545V$$

$$V_2(DC) = \left(\frac{100}{100+15}\right) 6.545V$$

$$V_2(DC) = 5.6913V$$

AC

$$V_1(AC) = 20.7V_{pp}$$

$$V_2(AC) = \left(\frac{(13.679-j34.363)}{(13.679-j34.363)+(15+j628)}\right) \cdot 20.7V_{pp}$$

$$V_2(AC) = 1.2882V_{pp}$$

5) Change the duty cycle and C so that

- The DC voltage at V2 = 5.00V
- The ripple at V2 is 100mVpp

If V2 = 5.00V, then V1 is

$$V_1(DC) = \left(\frac{100+15}{100}\right) V_2(DC)$$

$$V_1(DC) = 5.750V$$

The duty cycle is then

$$\alpha \cdot 20V + (1-\alpha)(-0.7V) = 5.750V$$

$$\alpha = \left(\frac{5.750V+0.7V}{20V+0.7V}\right)$$

$$\alpha = 0.3116 = 31.16\%$$

If C = 0, the ripple at C2 is

$$V_2(AC) = \left(\frac{100}{(100)+(15+j628)}\right) 20.7V_{pp}$$

$$V_2(AC) = 3.2423V_{pp}$$

To make the ripple 100mVpp, C2 must have an impedance of

$$Z_{c2} = \left(\frac{0.1V_{pp}}{3.2423V_{pp}}\right) \cdot 100\Omega$$

$$Z_{c2} = 3.084\Omega$$

$$\left|\frac{1}{j\omega C_2}\right| = 3.084\Omega$$

$$C_2 = 51.62\mu F$$

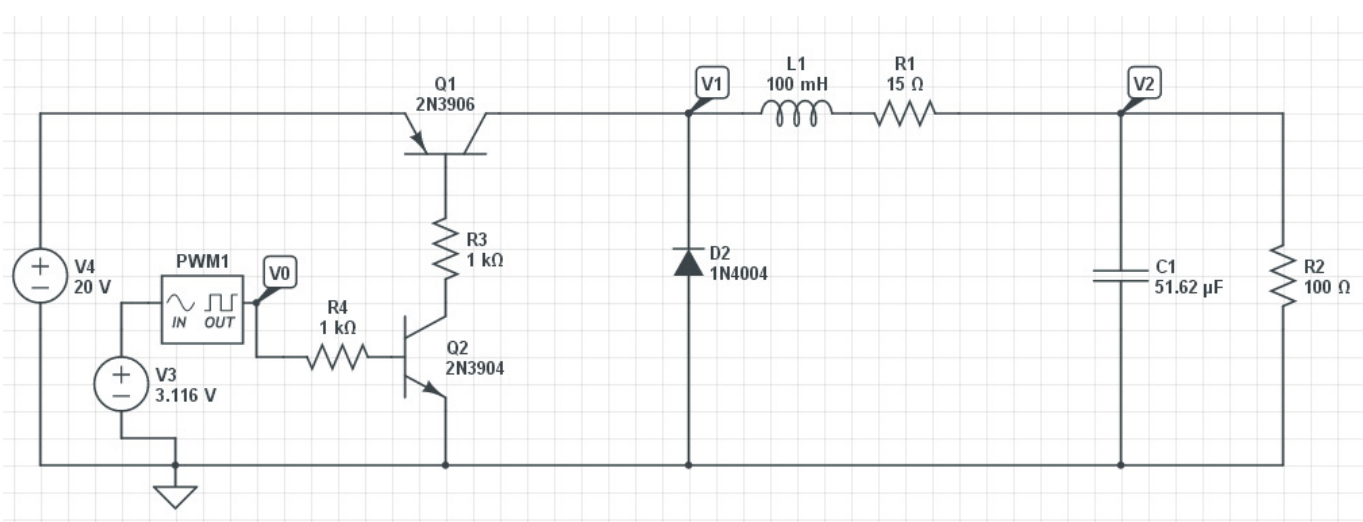

6) Simulate the circuit for problem #5 in CircuitLab and determine V2 (DC and AC)

- DC = 5.083V ( vs. 5.00V computed )
- AC = 153mVpp ( vs. 300mVpp computed )

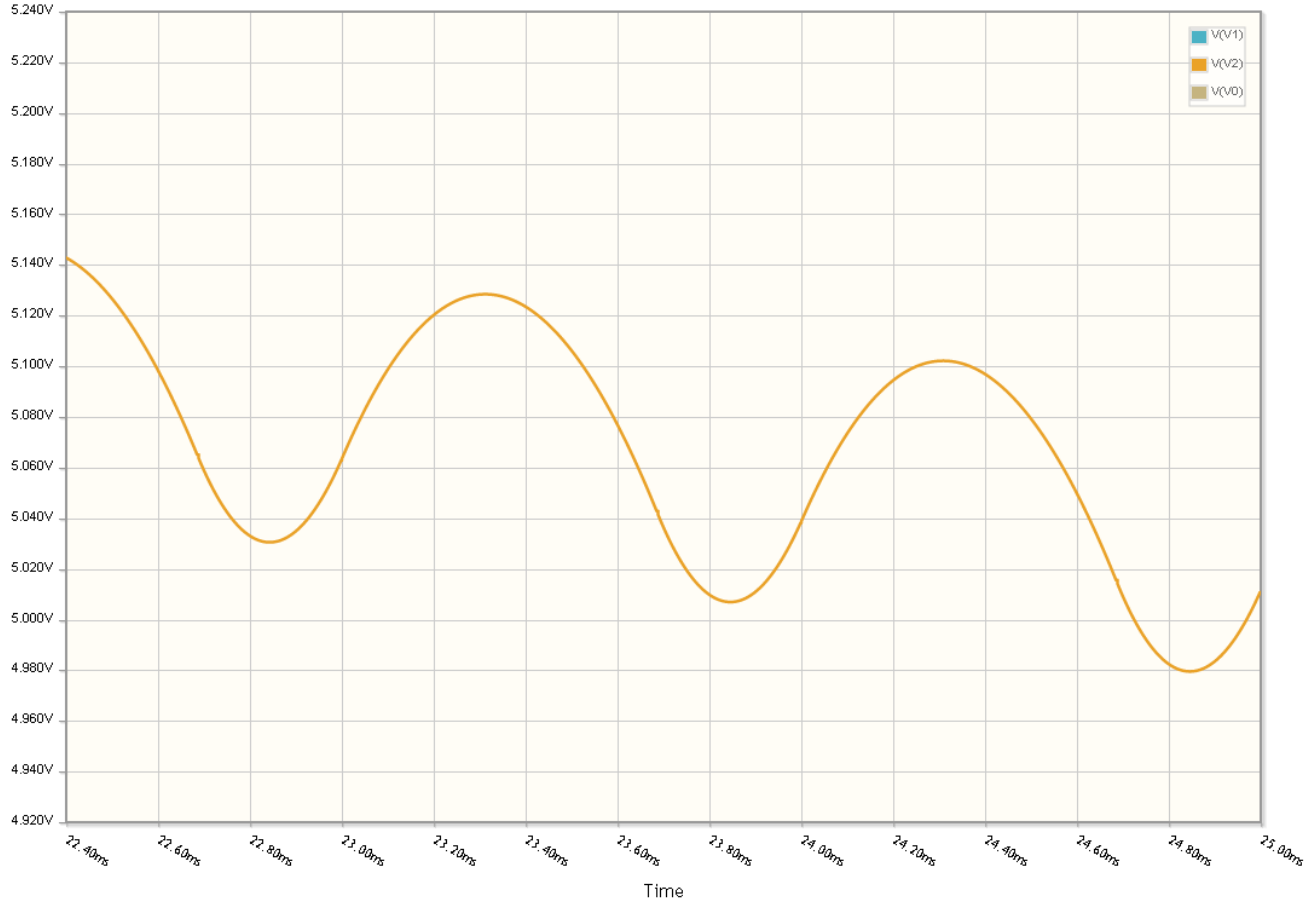

## Fourier Transforms

The voltage V1 in problem #4 is a 35% duty cycle square wave

$$V_1(t) = V_1(t + 1ms)$$ *V1 is periodic in 1ms - i.e. it's a 1kHz square wave*

$$V_1(t) = \begin{cases} +20V & 0 < t < 350\mu s \\ -0.7V & 350\mu s < t < 1000\mu s \end{cases}$$

7) Determine the first five terms for the Fourier transform for V1(t)

$$V_1(t) = a_0 + a_1\cos(\omega_0 t) + b_1\sin(\omega_0 t) + a_2\cos(2\omega_0 t) + b_2\sin(2\omega_0 t)$$

```
>> t = [0:0.001:1]';
>> V1 = 20*(t<0.35) - 0.7*(t>=0.35);
>> t = t * 2 * pi;
>> a0 = mean(V1)

a0 =    6.5378

>> a1 = 2*mean(V1 .* cos(t))

a1 =    5.3567

>> b1 = 2*mean(V1 .* sin(t))

b1 =   10.4347

>> a2 = 2*mean(V1 .* cos(2*t))

a2 =   -3.1044

>> b2 = 2*mean(V1 .* sin(2*t))

b2 =    4.3279

>> plot(t,V1,'b',t,a0+a1*cos(t)+b1*sin(t)+a2*cos(2*t)+b2*sin(2*t),'r')
```

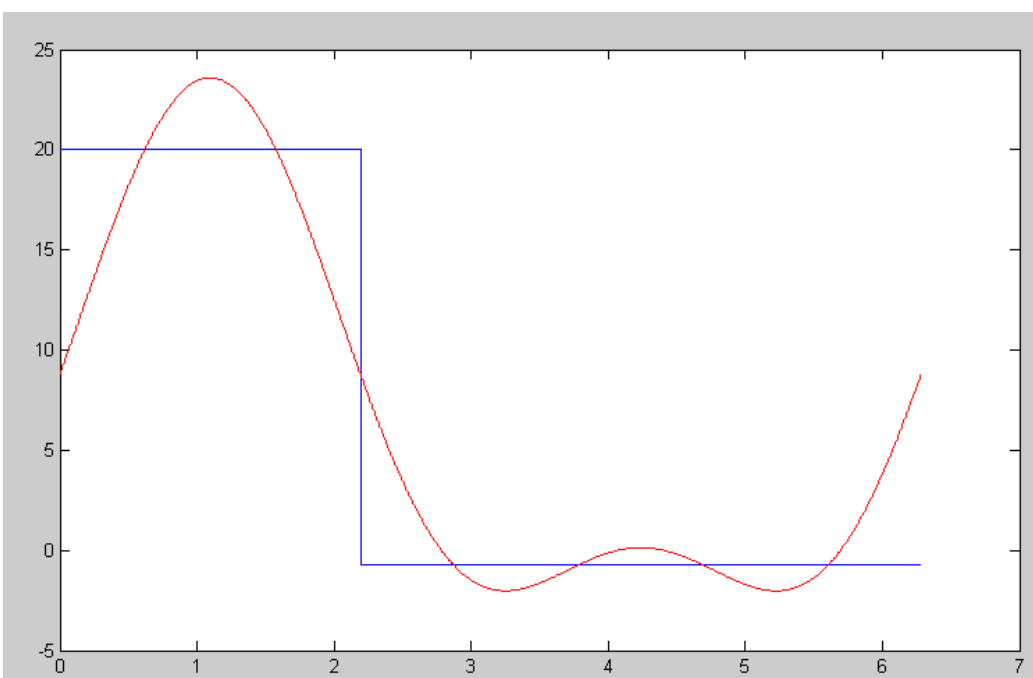

8) Determine V2(t) at each frequency

```
V1 = 6.5378 + 5.3567 cos(wt) + 10.4347 sin(wt) - 3.1044 cos(2wt) + 4.3279 sin(2wt)
```

## DC

$$V_1 = 6.5378$$

By voltage division

$$V_2 = \left(\frac{100}{100+15}\right) V_1$$

$$V_2 = 5.6850 \text{ V1}$$

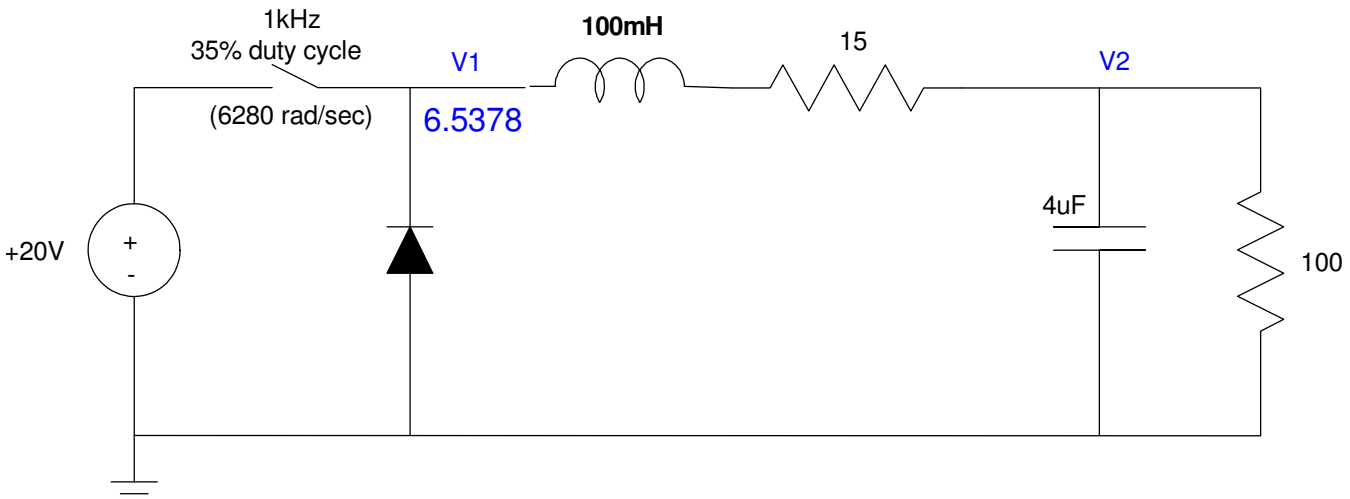

**1kHz: w = 6280**

```
V1 = 6.5378 + 5.3567 cos(wt) + 10.4347 sin(wt) - 3.1044 cos(2wt) + 4.3279 sin(2wt)
```

At 1kHz

$$V_1 = 5.3567\cos(6280t) + 10.4347\sin(6280t)$$

Converting to phasors

$$\omega = 6280\,\tfrac{rad}{\sec}$$

$$V_1 = 5.3567 - j10.4347$$

$$L \rightarrow j\omega L = j628$$

$$C \rightarrow \tfrac{1}{j\omega C} = -j39.81$$

By voltage division

$$V_2 = \left(\frac{(13.68 - j34.36)}{(13.68 - j34.36) + (15 + j628)}\right) V_1$$

$$V_2 = \left(\frac{(13.68 - j34.36)}{(13.68 - j34.36) + (15 + j628)}\right)(5.3567 - j10.4347)$$

$$V_2 = -0.5724 + j0.4529$$

meaning

$$v_2(t) = -0.5724\cos(6280t) - 0.4529\sin(6280t)$$

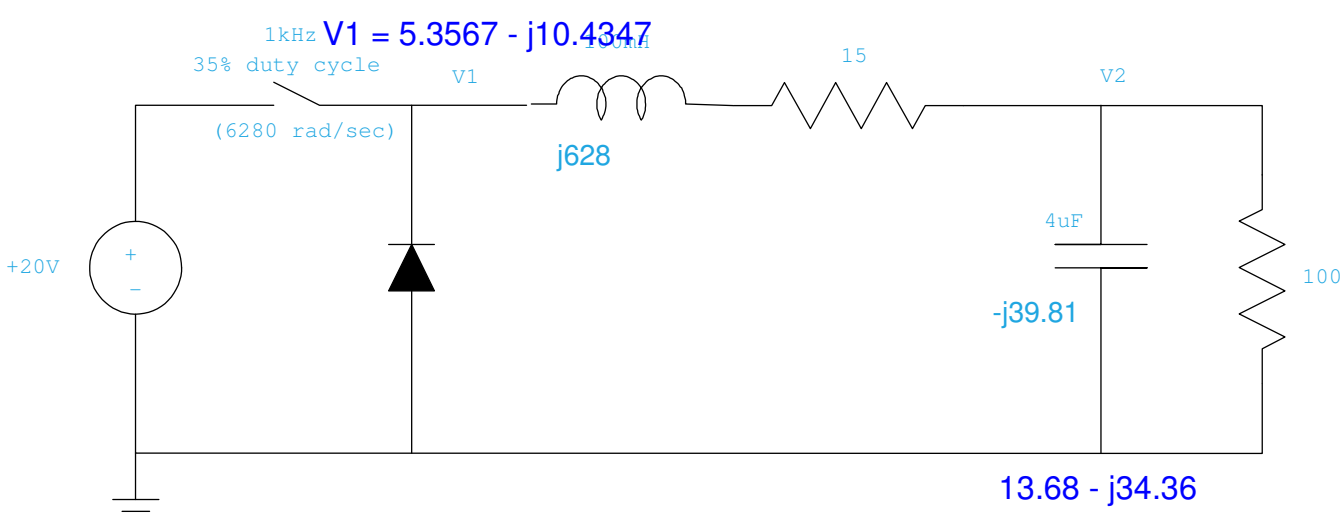

```
V1 = 6.5378 + 5.3567 cos(wt) + 10.4347 sin(wt) - 3.1044 cos(2wt) + 4.3279 sin(2wt)
```

**2kHz: w = 12,560**

$$v_1(t) = -3.1044\cos(12560t) + 4.3279\sin(12560t)$$

Convert to phasors

$$V_1 = -3.1044 - j4.3279$$

$$\omega = 12,560$$

$$L \rightarrow j\omega L = j1256\Omega$$

$$C \rightarrow \frac{1}{j\omega C} = -j19.90\Omega$$

By voltage division

$$V_2 = \left(\frac{3.811 - j19.146}{(3.811 - j19.146) + (15 + j1256)}\right) V_1$$

$$V_2 = \left(\frac{3.811 - j19.146}{(3.811 - j19.146) + (15 + j1256)}\right)(-3.1044 - j4.3279)$$

$$V_2 = 0.0335 + j0.0771$$

meaning

$$v_2(t) = 0.0335\cos(12560t) - 0.0771\sin(12560t)$$

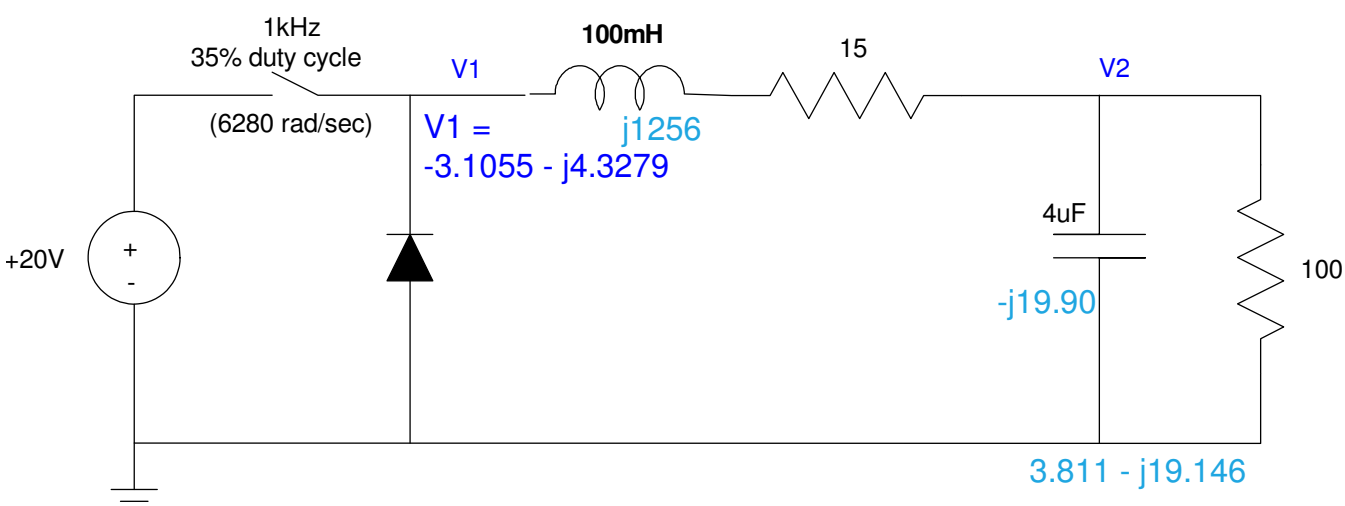

Put it all together

V2 = DC + 1kHz + 2kHz terms

**V2 = 5.6850 - 0.5724 cos(6280t) - 0.4529 sin(6280t) + 0.03350 cos(12560t) - 0.0771 sin(12560t)**

9) How do your answers for problem #1 and problem #8 compare?

| | Problem #4 | Problem #8 |
|---|---|---|
| V2(DC) | 5.6913 | 5.6850 |
| V2<br>1kHz term | 1.2882 Vpp | - 0.5724 + j0.4529<br>1.4598 Vpp |
| V2<br>2kHz term | 0 Vpp | 0.03350 + j0.0771<br>0.1681 Vpp |