ECE 320 - Homework #7

DC to AC, SCR, Boolean Logic. Due Monday, October 12th

DC to AC

1) Let

- A = 0V / 5V square wave, 60Hz, 0 degree time delay
- B = 0V / 5V square wave, 60Hz, 180 degree time delay
- C = 10uF

Determine using CircuitLab the voltage V2 (i.e. the votlage across a DC motor, modeled as a 10 Ohm & 200mH load) (note: The LC oscillator is tuned to 180Hz. Increase C to bring this down to 60Hz.)

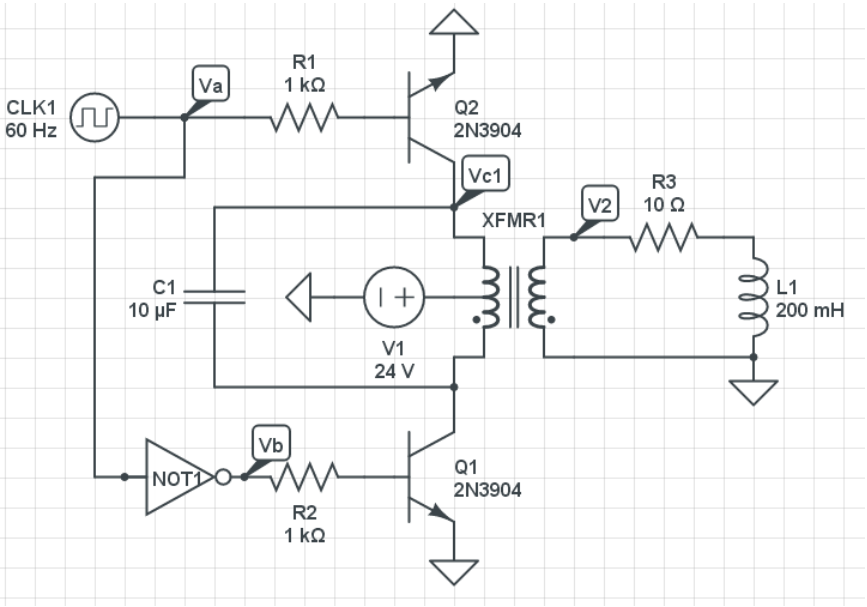

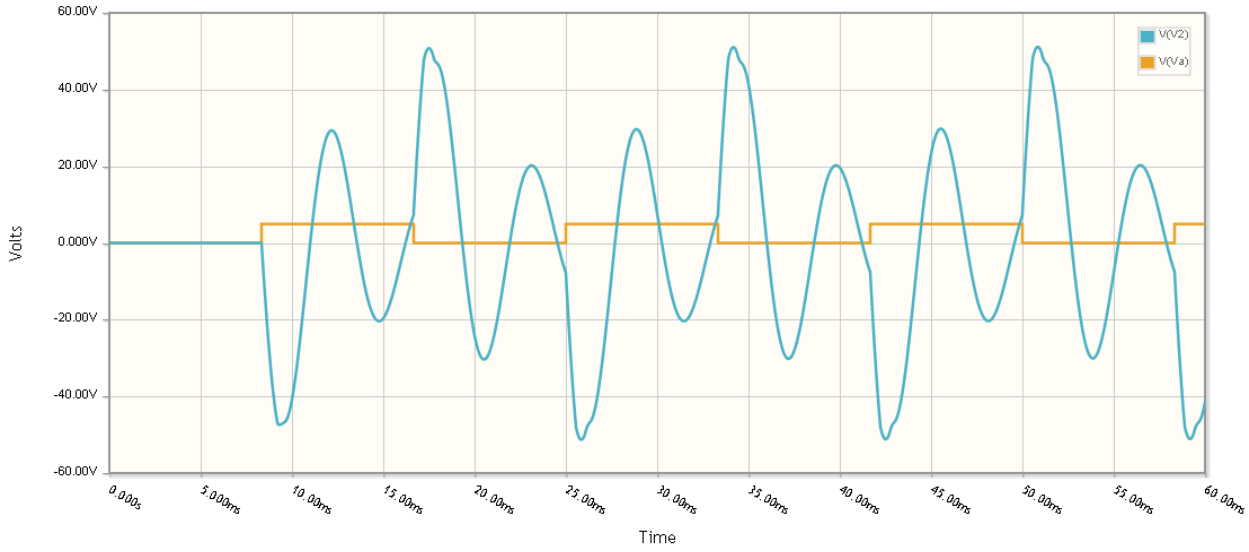

2) Adjust C so that the voltage across the motor is as close to a sine wave as possible (trial and error)

The resonance of an LC oscillator is

$$\left(\frac{1}{LC}\right) = \omega^2$$

To drop the resonance by 3x, make C 3x larger

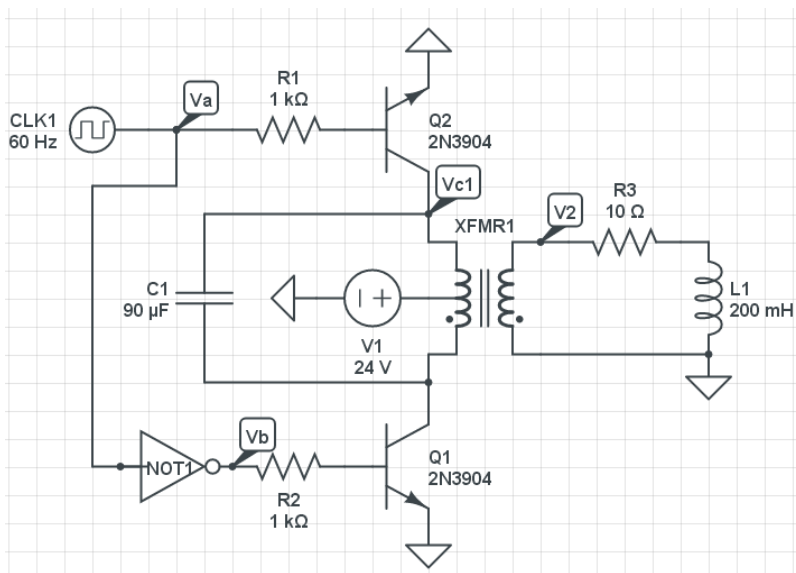

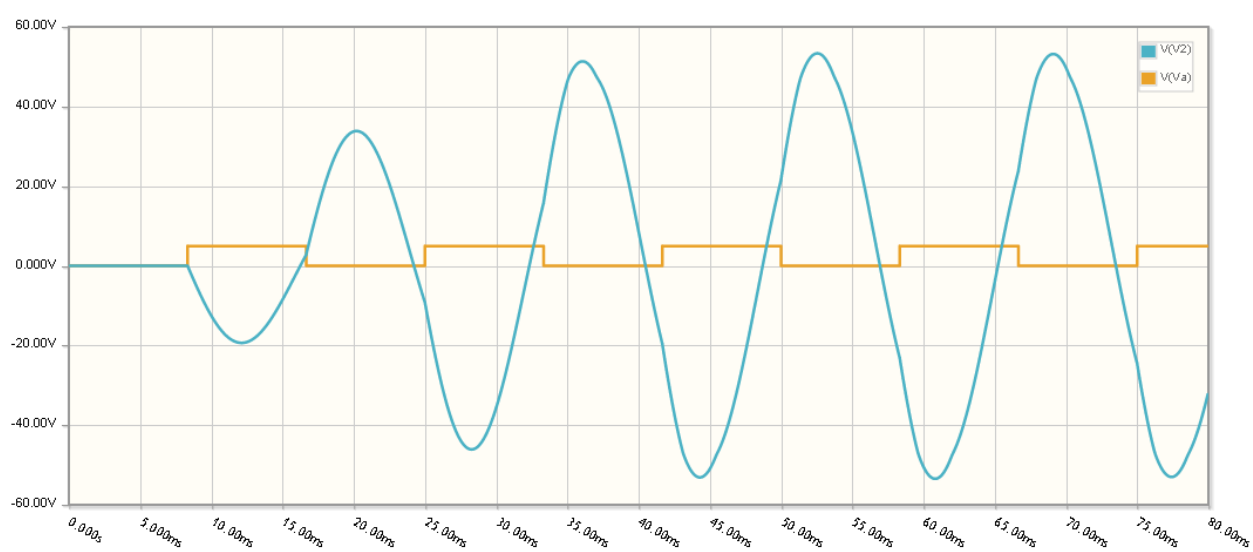

SCR

3) Assume a firing angle of 25 degrees. Determine the voltage at V1 and V2 (both DC and AC).

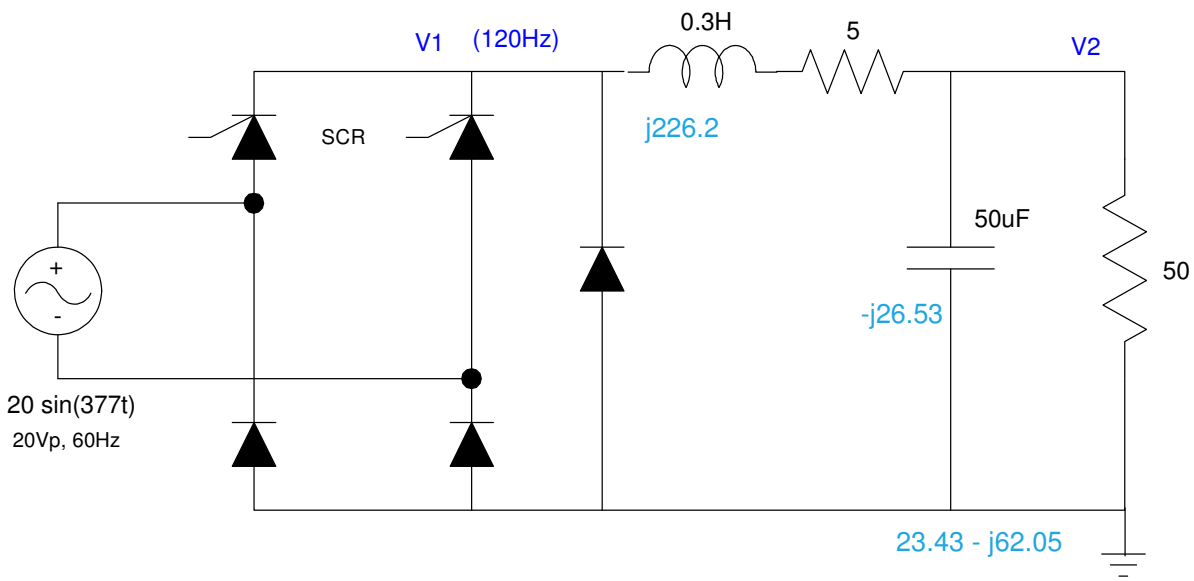

V1(DC)

$$V_1 = \left(\frac{V_p+0.7}{\pi}\right)(1+\cos\theta) - 0.7$$

$$V_1(DC) = \left(\frac{18.6+0.7}{\pi}\right)(1+\cos(25^0)) - 0.7$$

$$V_1(DC) = 11.011$$

$$V_2(DC) = \left(\frac{50}{50+5}\right)11.011$$

$$V_2(DC) = 10.01V$$

$$V_1(AC) = 18.6V - (-0.7V) = 19.3V_{pp}$$

$$V_2(AC) = \left(\frac{(23.43-j62.05)}{(23.43-j62.05)+(5+j226.2)}\right)19.3V_{pp}$$

$$V_2(AC) = 2.194V_{pp}$$

4) Change this circuit so that

- The voltge at V2 is 5.00V (DC)
- With a ripple of 500mVpp

$$V_1 = \left(\frac{50+5}{50}\right) V_2 = 5.50V$$

$$V_1 = 5.50V = \left(\frac{V_p+0.7}{\pi}\right)(1+\cos\theta) - 0.7$$

$$\theta = 89.47^0$$

C2:

50uF resulted in 2.194Vpp ripple

To reduce the ripple to 500mVpp

$$C_2 = \left(\frac{2.194V_{pp}}{500mV_{pp}}\right) 50\mu F$$

$$C_2 = 219.4\mu F$$

5) Simulate this circuit in Matlab by

- Writing the differential eqautions which describe this circuit (state variables: IL and Vc)
- Specify V1(t) as a full-wave rectified sine wave, clipped at X degrees (from problem #4)
- Use numerical integration to find V2(t

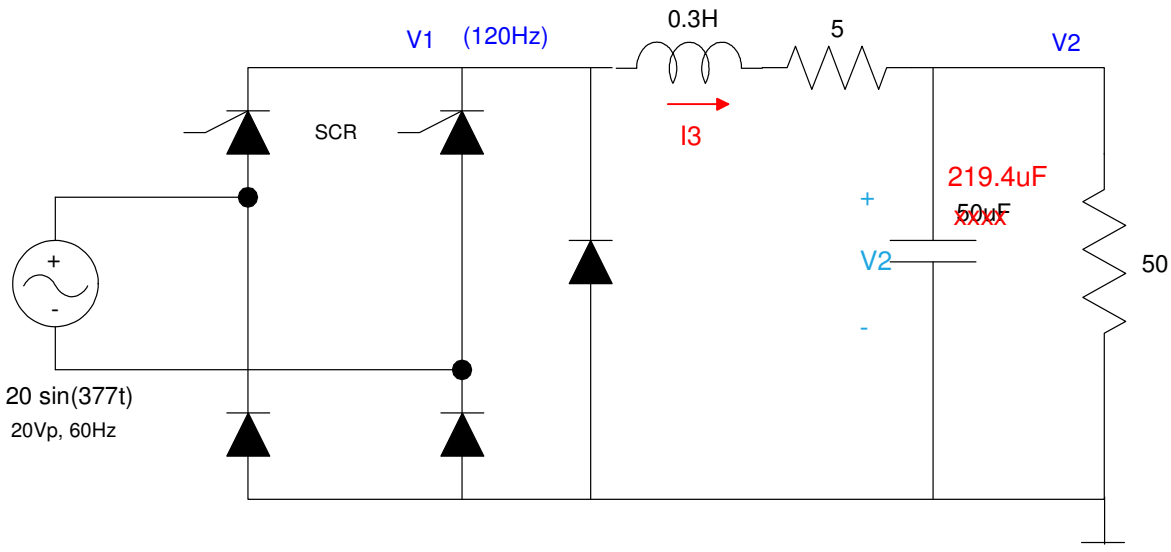

$$V_1 = L\dot{I}_3 = V_1 - 5I_3 - V_2$$

$$I_c = C\dot{V}_2 = I_3 - \frac{V_2}{50}$$

$$\dot{I}_3 = 3.333V_1 - 16.667I_3 - 3.333V_2$$

$$\dot{V}_2 = 4557.9I_3 - 91.158V_2$$

matlab code

```
t = [0:0.001:1]'/120/2;
dt = ( t(2) - t(1) );
phi = ( 89.47/360 ) * (1/120);
V1 = 18.6*sin(754*t) .* (t > phi) - 0.7*(t < phi);
V2 = 0*t;
I3 = 0*t;
npt = length(t);

for n=1:40
 V2(1) = V2(npt);
 I3(1) = I3(npt);
 for i=1:npt-1
    dI3 = 3.3333*V1(i) - 16.667*I3(i) - 3.333*V2(i);
    dV2 = 4557.9*I3(i) - 91.158*V2(i);
    V2(i+1) = V2(i) + dV2 * dt;
    I3(i+1) = I3(i) + dI3 * dt;
    end
 plot(t,V1,t,V2);
 pause(0.1);
 end
plot(t,V2);
```

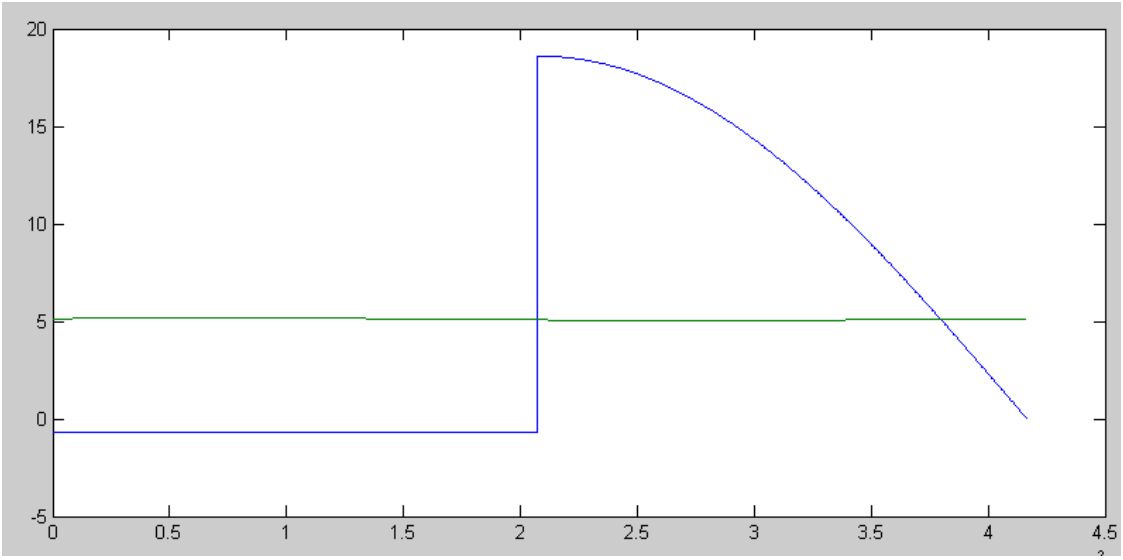

V1 (blue) and V2 (green)

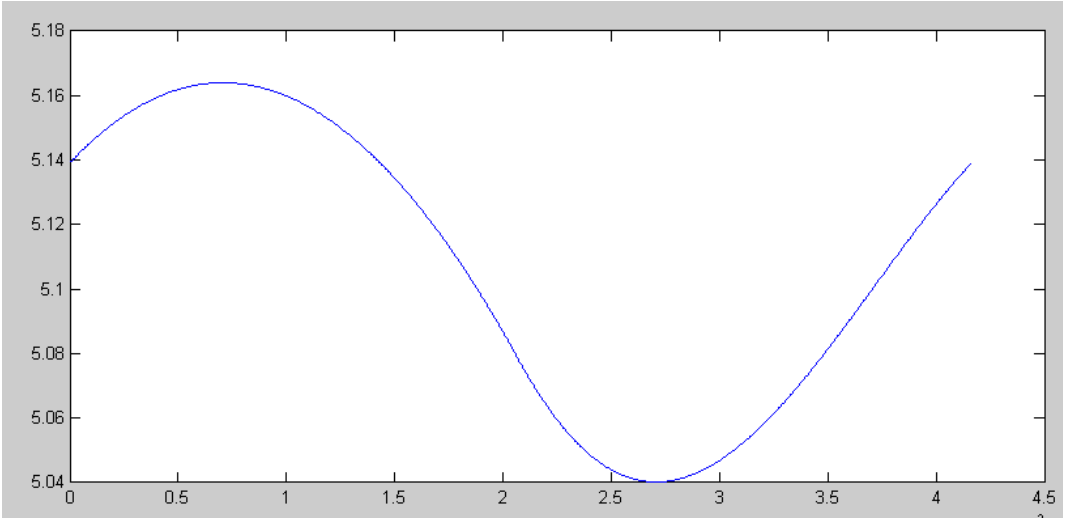

V2(t)

```
>> mean(V2)

ans =    5.1070

>> max(V2)-min(V2)

ans =    0.1238
```

Boolean Logic:

5) Implement the following funciton using NAND gates (i.e. circle the ones)

AB \ CD	00	01	11	10
00	1	0	0	0
01	1	1	0	1
11	x	x	x	x
10	1	1	x	x

Y = C'D' + BC' + CD' + A

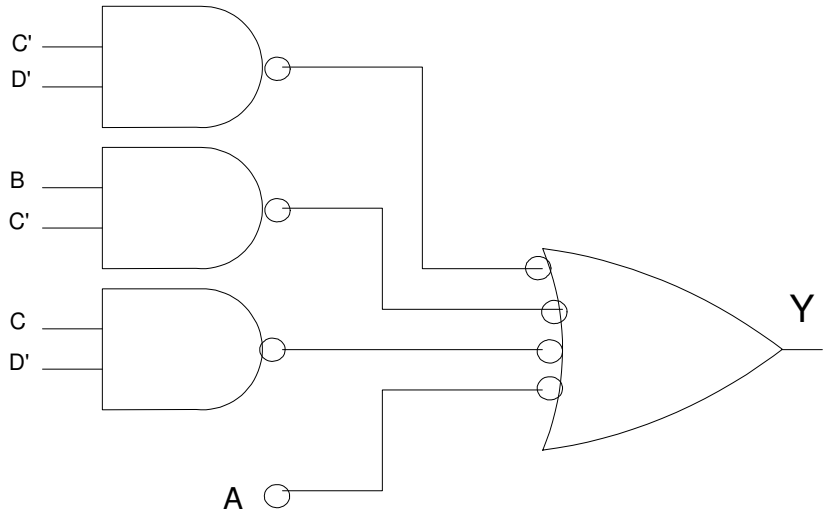

6) Implement the following function using NOR gates (i.e. circle the zeros)

AB \ CD	00	01	11	10
00	1	0	0	0
01	1	1	0	1
11	x	x	x	x
10	1	1	x	x

$Y' = A'B'D + B'C + CD$

$Y = (A + B + D')(B + C')(C' + D')$