ECE 320: Quiz #6 Name _____

DTL, TTL Logic - March 3, 2016

1) Implement the following logic for Y(A, B, C, D) using NAND gates (i.e. circle the ones)

Y(A,B,C,D)

AB \ CD	00	01	11	10
00	1	0	0	1
01	0	0	0	1
11	x	x	x	x
10	1	0	x	x

$Y = C\bar{D} + \bar{B}\bar{D}$

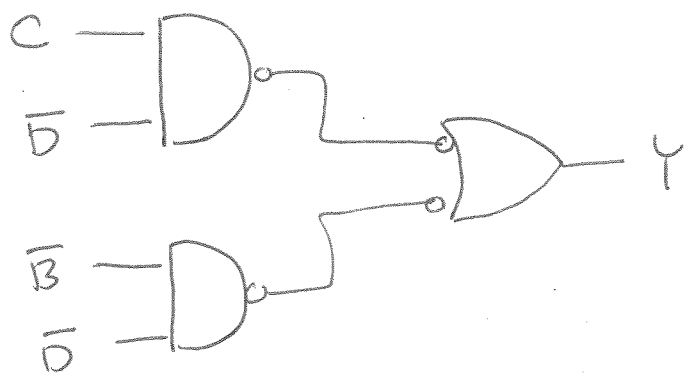

2) Implement the following logic for Y(A, B, C, D) using NOR gates (i.e. circle the zeros.)

Note: DeMorgan's Theorem is

$$\overline{AB} = \overline{A} + \overline{B}$$

$$\overline{A+B} = \overline{A} \cdot \overline{B}$$

Y(A,B,C,D)

AB \ CD	00	01	11	10
00	1	0	0	1
01	0	0	0	1
11	x	x	x	x
10	1	0	x	x

$$\overline{Y} = D + B\overline{C}$$

$$Y = \overline{D} \cdot (\overline{B} + C)$$

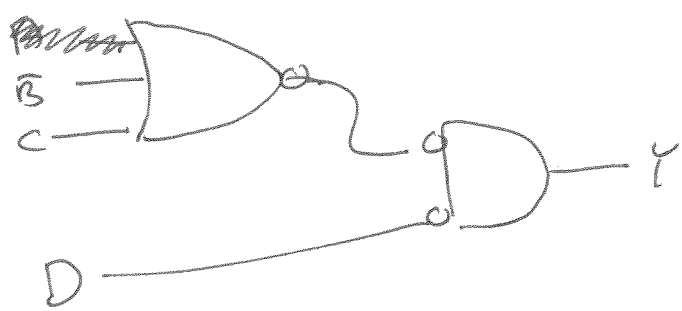

3) Determine the voltages and currents for the following DTL NOR gate

I1	I2	V3	V4
0	0	0V	4.55V

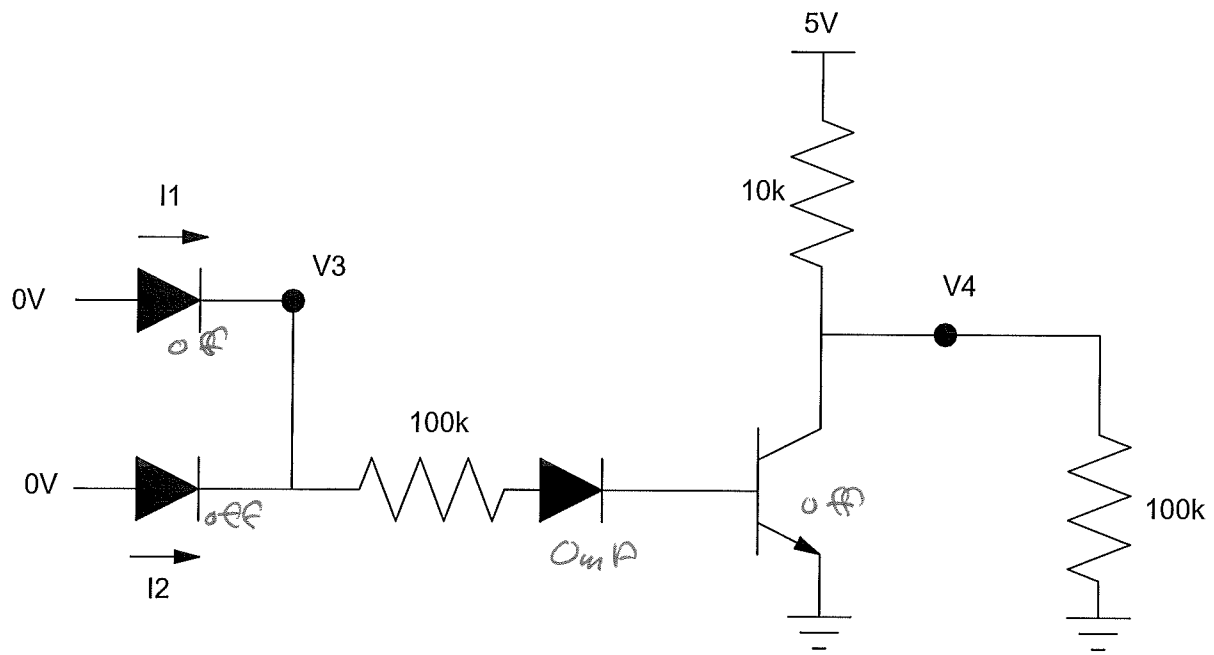

4) Determine the voltages and currents for the following DTL NOR gate

I1	I2	V3	V4
0	29μA	4.3V	0.2V

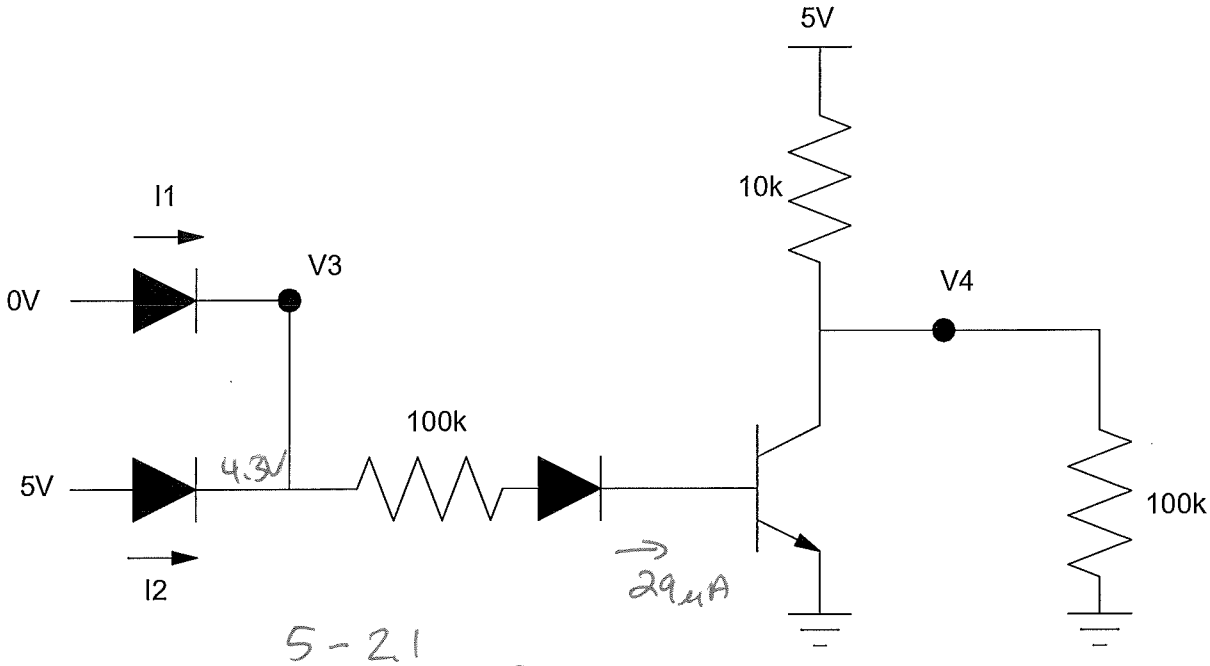

$$\frac{5-2.1}{100k} = 29\mu A$$

$I_c = 480\mu A$

$\beta I_b = 2900\mu A$

$\beta I_b > I_c$

5) Determine the voltages and currents for the following TTL inverter

V1	V2	Ib	Ic
1.4V	0.2V	132μA	953μA

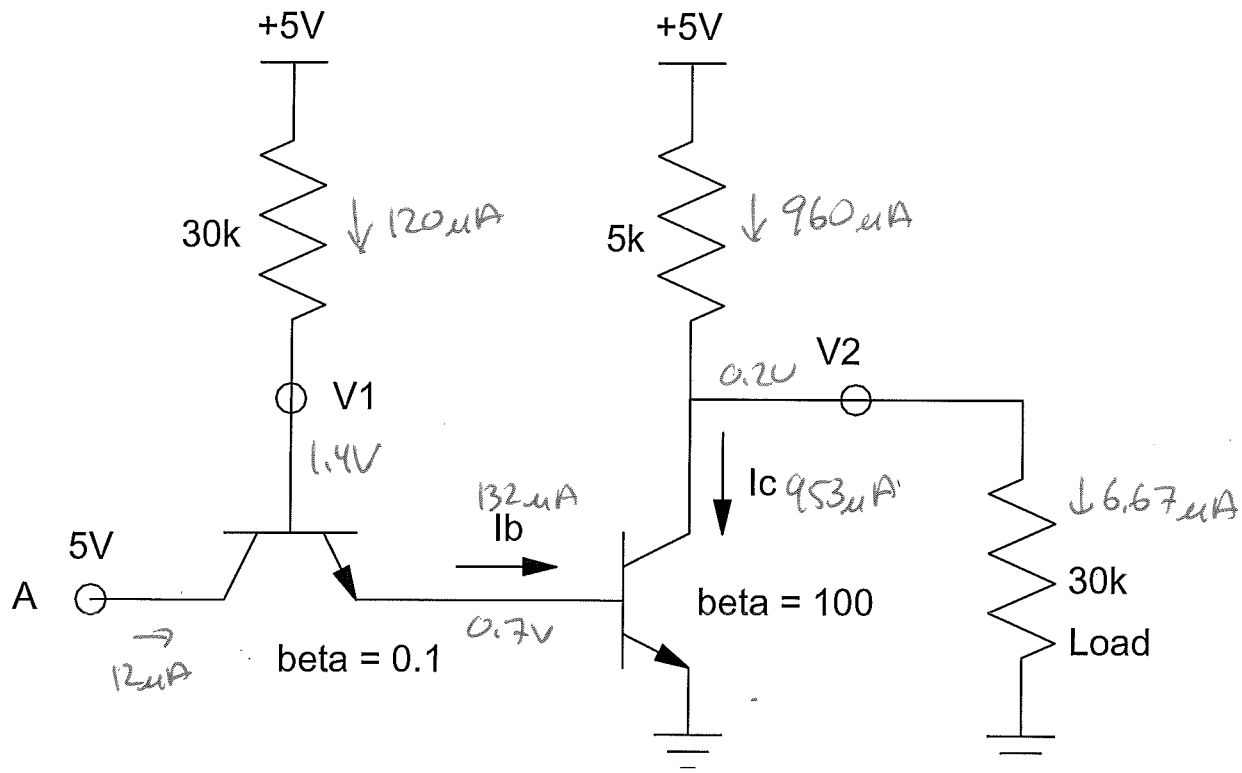

$\beta I_b = 13.2mA$

$max(I_c) = 5mA$

∴ saturated

Wind Energy Bonus! Assume a Siemens 2.3MW wind turbine was placed in Fargo. How many kWh would this produce in 2015? (roughly equal to the pounds of coal you would avoiding burning to produce this electricity).

@2.3mw = $20 \cdot 10^6$ kWh

@40% util $8 \cdot 10^6$ kWh