ECE 320: Quiz #1: Name _____

EE 206 Review

1) Conservation of Current: Determine the currents Ia, Ib, Ic, and Id

Ia	Ib	Ic	Id
20	30	15	35

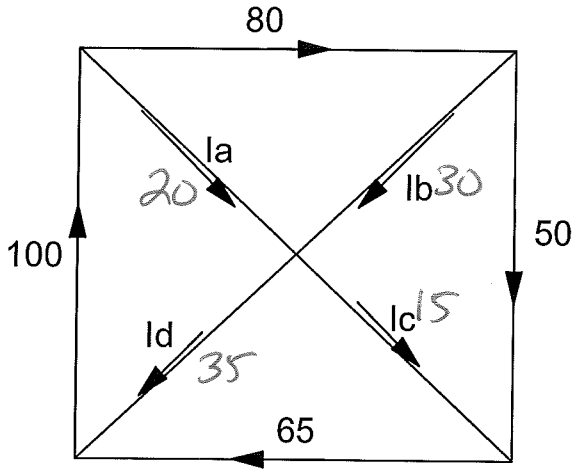

2) Conservation of Voltage: Determine the voltages V1, V2, V3, and V4

V1	V2	V3
45	27	67

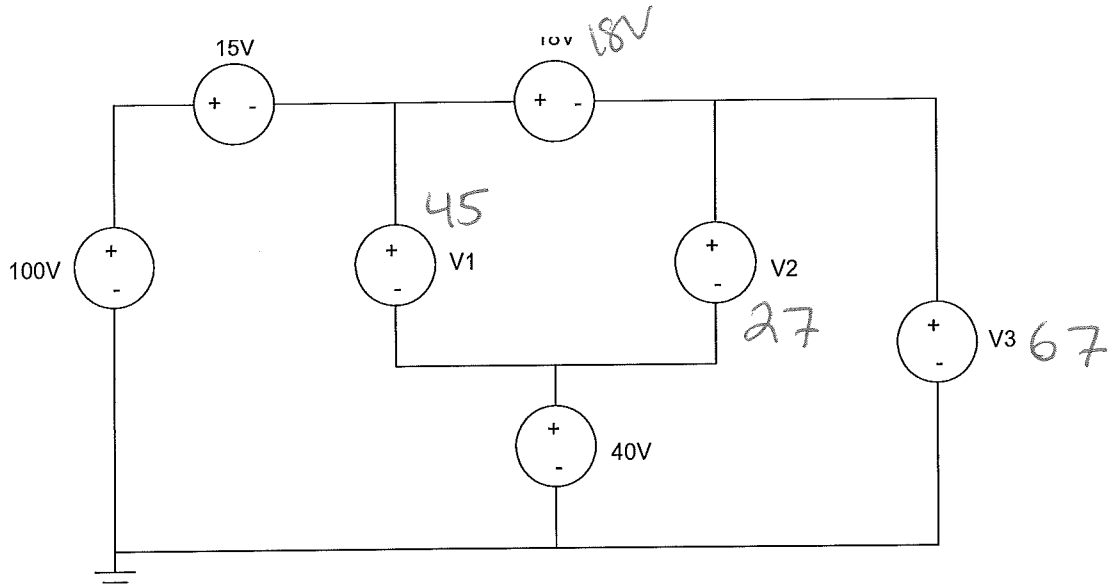

3) KVN: Write the voltage node equations for V1..V4 (sum of currents = zero).

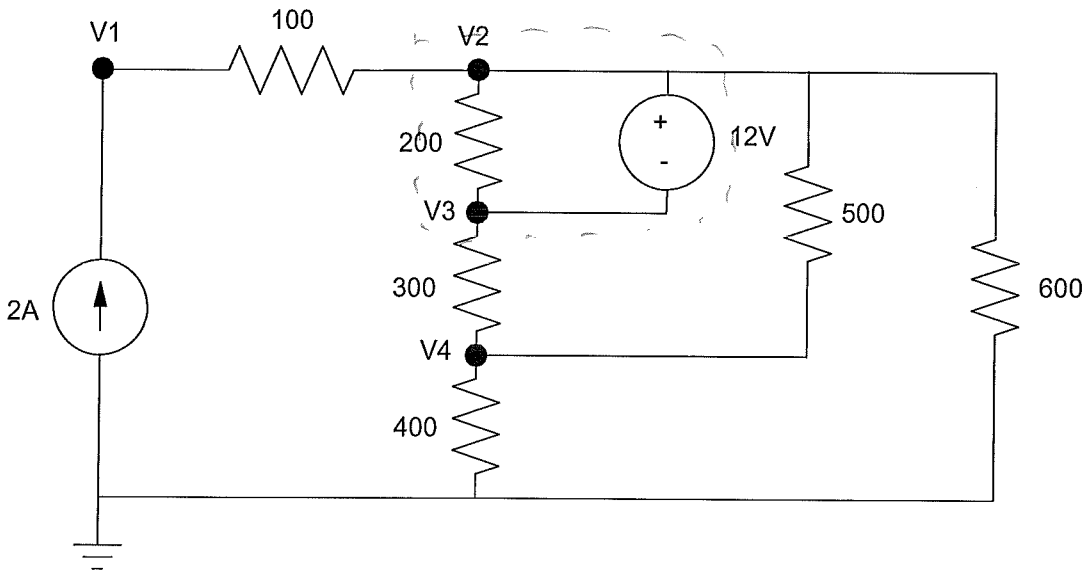

$2 = \frac{V_1 - V_2}{100}$
$V_2 - V_3 = 12$
$\frac{V_2 - V_1}{100} + \frac{V_2 - V_4}{500} + \frac{V_2}{600} + \frac{V_3 - V_4}{300} = 0$
$\frac{V_4 - V_3}{300} + \frac{V_4}{400} + \frac{V_4 - V_2}{500} = 0$

4) KCL: Write the current loop equations for I1..I4 (sum of voltages equals zero)

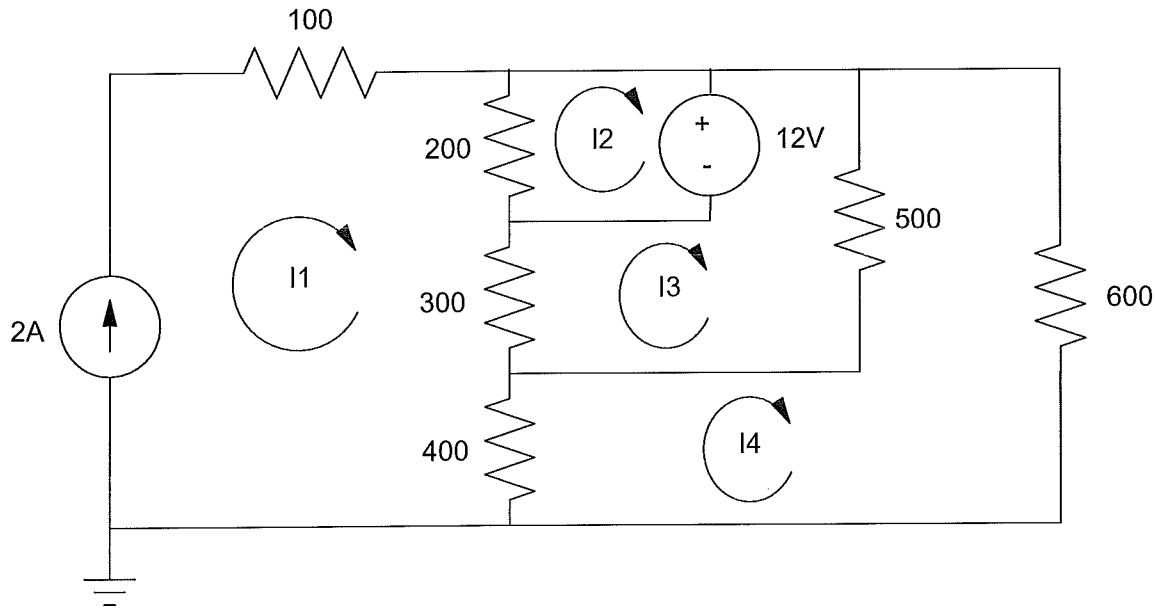

$I_1 = 2$
$12 + 200(I_2 - I_1) = 0$
$300(I_3 - I_1) - 12 + 500(I_3 - I_4) = 0$
$400(I_4 - I_1) + 500(I_4 - I_3) + 600 I_4 = 0$

5) Thevenin Equivalents: Find the Thevenin equivalent for the following circuit:

Vth	Rth
$\frac{90}{69}$ ~~= 1.304V~~ 8.26V	400 ‖ 366.67 191Ω

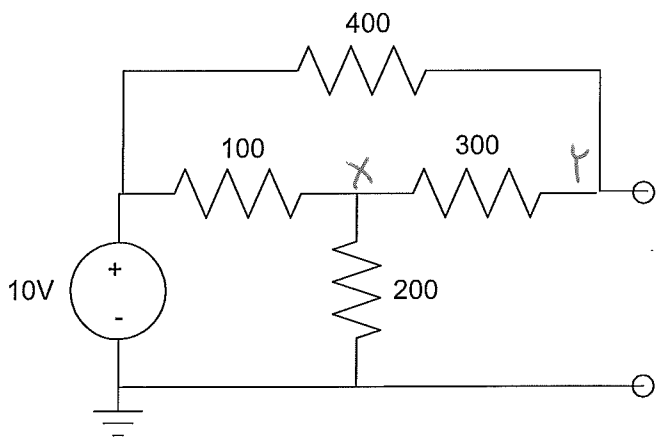

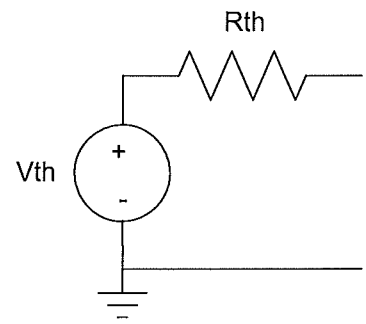

R_{th}: $100 \| 200 = 66.67\Omega$

$+300 = 366.67$

$R_{th} = 400 \| 366.67$

$=$

$(\cdot 6\omega)$ $\frac{X-10}{100} + \frac{X}{200} + \frac{X-Y}{300} = 0$

$6(X-10) + 3X + 2(X-Y) = 0$

$\cdot 12$ $\frac{Y-10}{400} + \frac{Y-X}{300} = 0$

$3(Y-10) + 4(Y-X) = 0$

$*4$ $11X - 2Y = 60$

$*11$ $-4X + 7Y = 30$

Bonus! In Fargo, 1kWh of electricity costs about $0.10. How many pounds of coal does it take to produce 1kWh?

1 lb.

$77 - 8 = 69$

$69Y = 570$

$Y = \frac{570}{69}$

$= 8.26V$

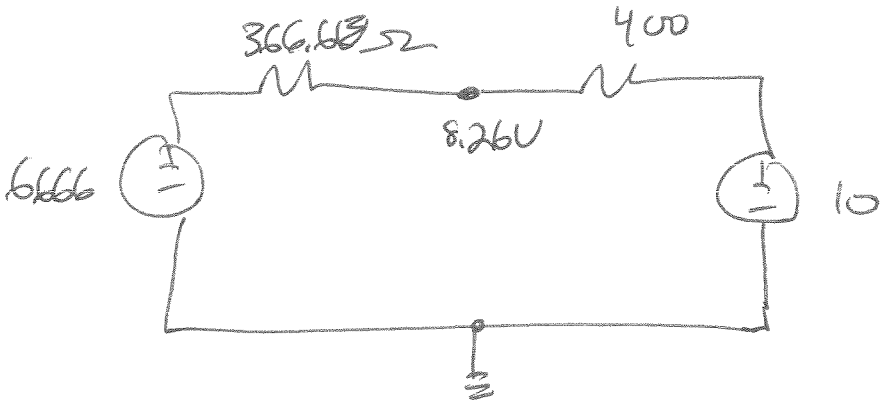

191Ω