ECE 320: Quiz #3 Name _____

Ideal Diodes, LEDs, Clipper Circuits - February 4, 2016

1) Assume ideal silicon diodes (Vf = 0.7V). Determine the currents I1, I2, I3, and I4

I1	I2	I3	I4
7.9mA	4.4mA	1.4mA	2.1mA

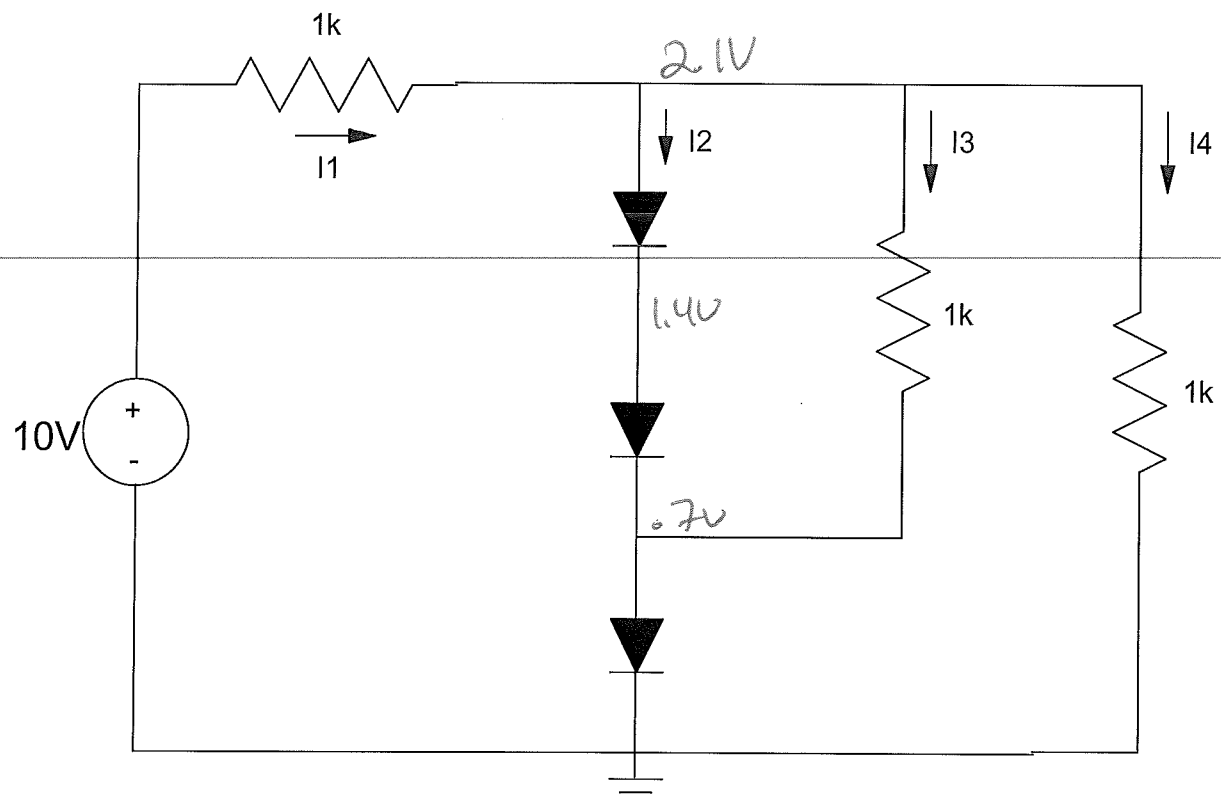

2) Assume ideal silicon diodes (Vf = 0.7V). Determine the currents I1, I2, I3, and I4

I1	I2	I3	I4
1.766mA	0	.533mA	1.233mA

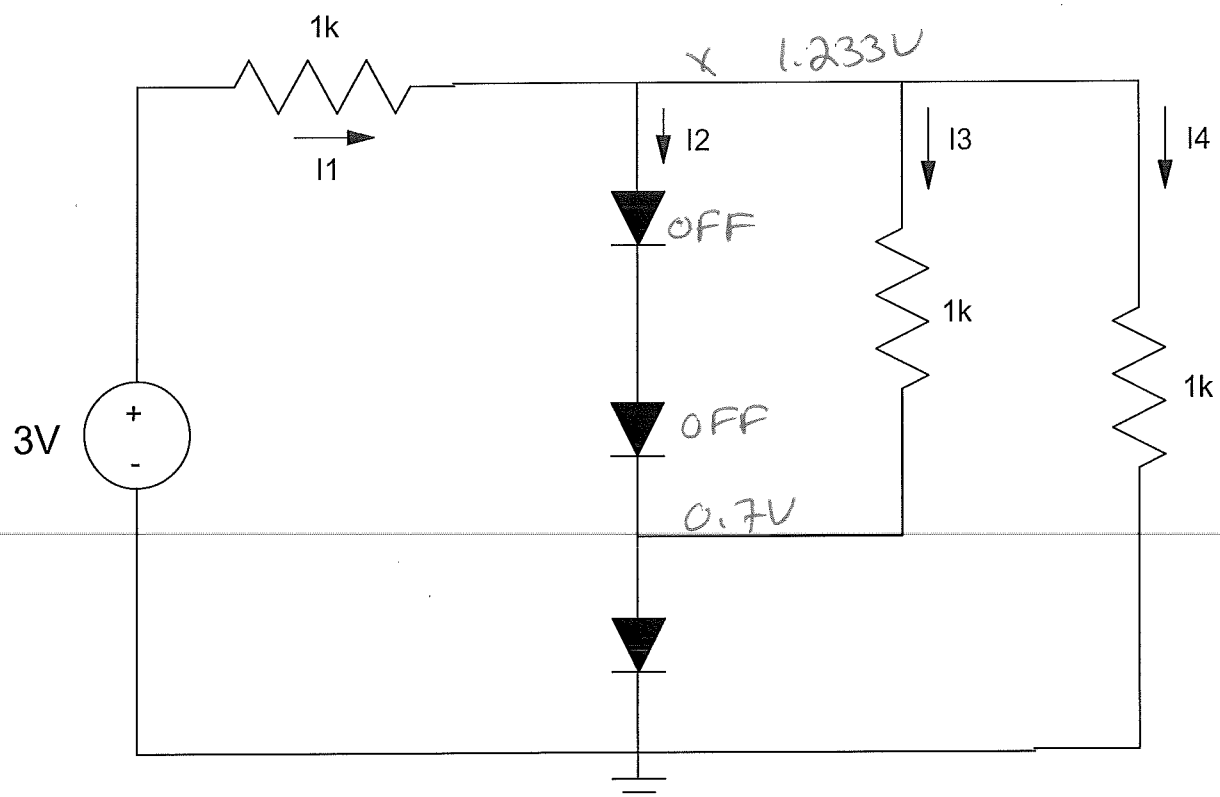

$$\frac{x-3}{1k} + \frac{x-.7}{1k} + \frac{x}{1k} = 0$$

$$3x = 3.7$$

$$x = 1.233V$$

3) Assume an RGB Piranah LED with the following specifications

	Red	Green	Blue
Vf @ 20mA	1.9V	3.0V	3.5V
mcd @ 20mA	8,000	8,000	8,000

Find Rr, Rg, and Rb so that the LED outputs dark purple

- Red = 950mcd
- Green = 21 mcd
- Blue = 106 mcd

Rr (950 mcd)	Rg (21 mcd)	Rb (106 mcd)
3410 Ω	133 kΩ	24.5kΩ

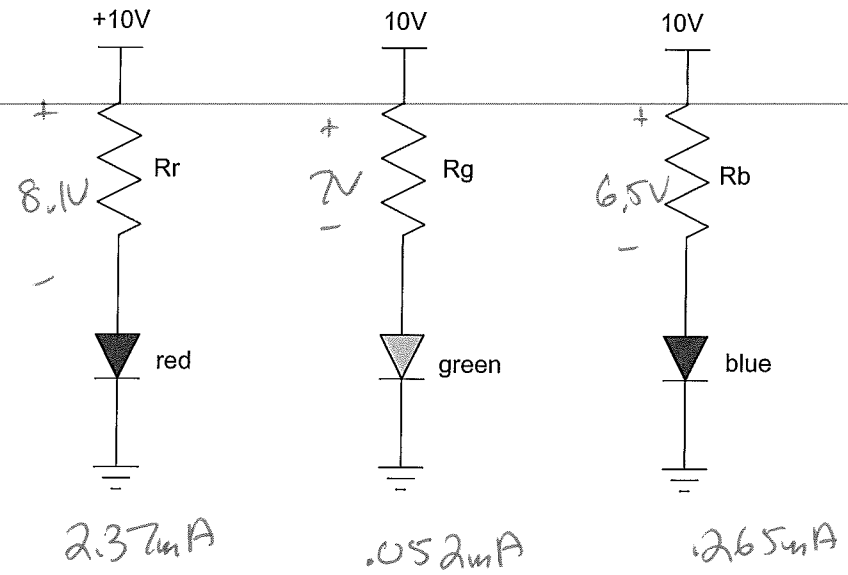

4) Design a clipper circuit to impliment the following function

R1	Vz1	R2	Vz2
1k	2V	250	3V

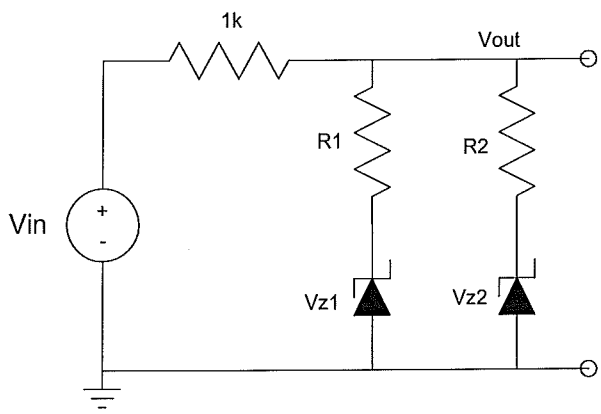

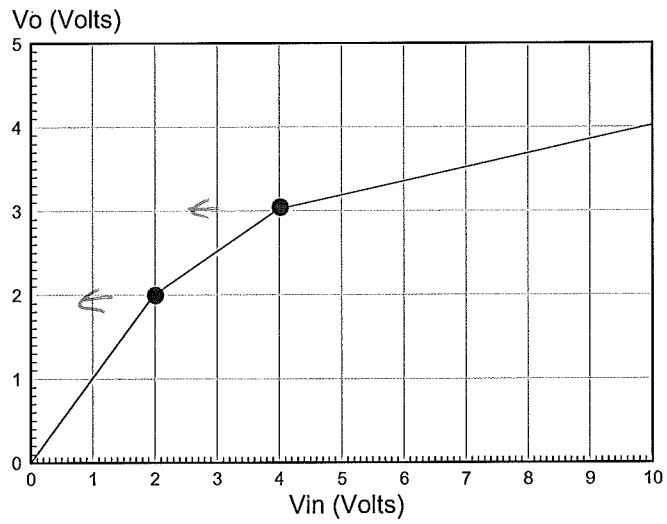

$$\text{Slope} = 1/2 = \frac{R_1}{R_1 + 1k}$$

$$\text{Slope} = 1/6 = \frac{R_2}{R + 1000}$$

$$R = 200 = R_1 \| R_2$$

$$R = 250$$

5) Design a circuit to limit the output to +5V and -3V

$$V_{out} = \begin{cases} +5V & V_{in} > 5V \\ V_{in} & -3V < V_{in} < +5V \\ -3V & V_{in} < -3V \end{cases}$$

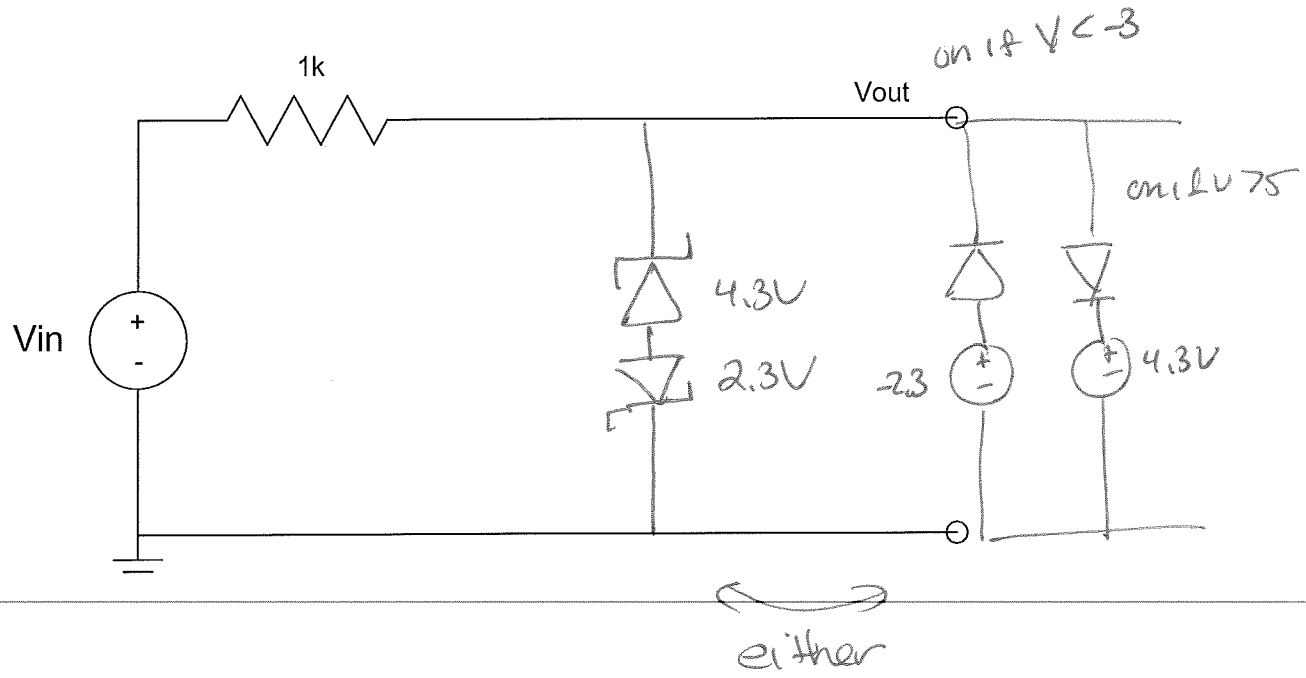

Bonus! It takes 7.8 million pounds of coal to power a 3mW LED for every person in the U.S. for a year. Within 10%, how many pounds of Uranium does it take using nuclear power?

1 lb U_{235} ≈ 11 million kWh

.7 lb U_{235} = 11 oz = 14cc ≅ 1 inch cube ~~sphere~~

(267g)