ECE 320 - Solution to Homework #3

Ideal Diode, LED, Clipper Circuits. Due Monday, February 1st

1) Assume ideal silicon diodes. Determine V1, V2, and V3

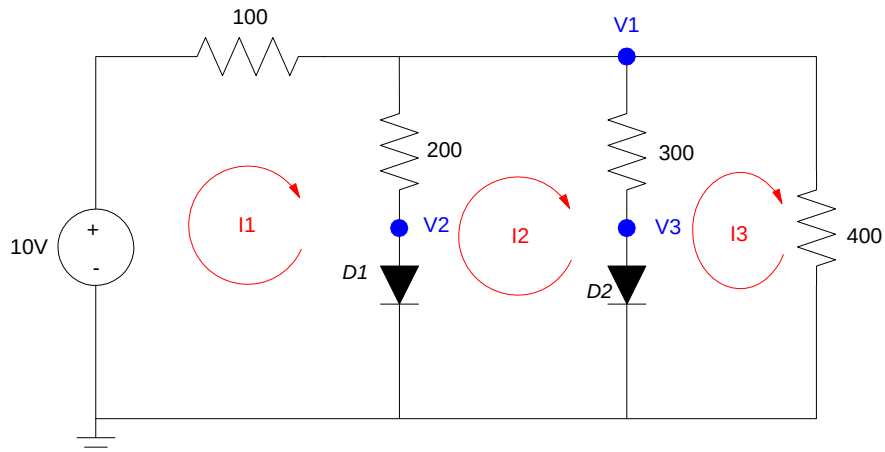

Assume D1 and D2 are on

- V2 = 0.7V
- V3 = 0.7V

Solve for V1:

$$\left(\frac{V_1-10}{100}\right)+\left(\frac{V_1-0.7}{200}\right)+\left(\frac{V_1-0.7}{300}\right)+\left(\frac{V_1}{400}\right)=0$$

- V1 = 5.08V

From PartSim, the voltages are about the same

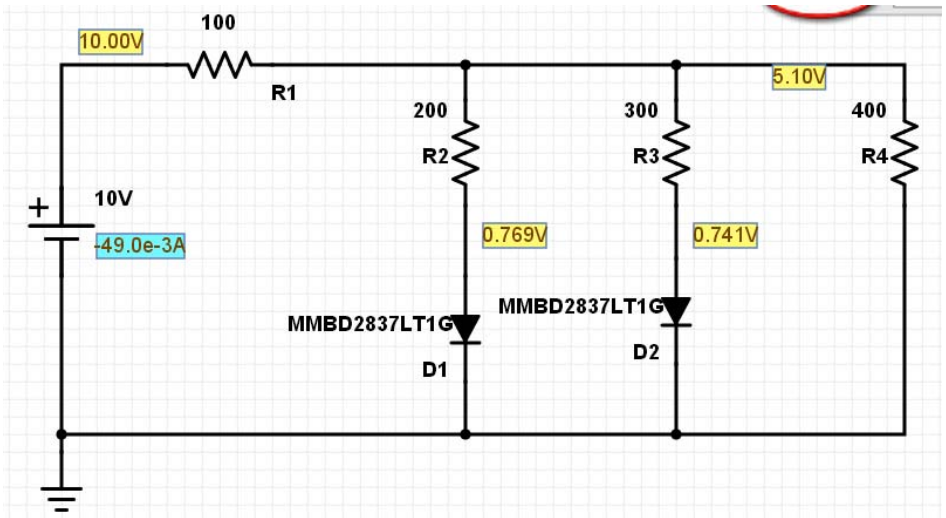

2) Assume ideal silicon diodes. Determine V1 .. V5

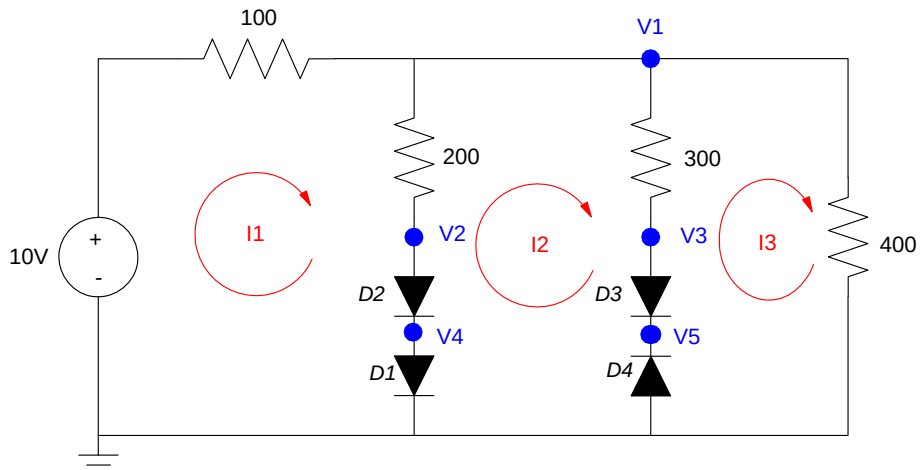

Assume D1, D2 are on, D4 is off

- V4 = 0.7V
- V2 = 1.4V

$$\left(\frac{V_1-10}{100}\right)+\left(\frac{V_1-1.4}{200}\right)+\left(\frac{V_1}{400}\right)=0$$

- V1 = 6.1143V
- V3 = 6.1143V
- V5 = 6.1143V

From PartSim, the voltages are close

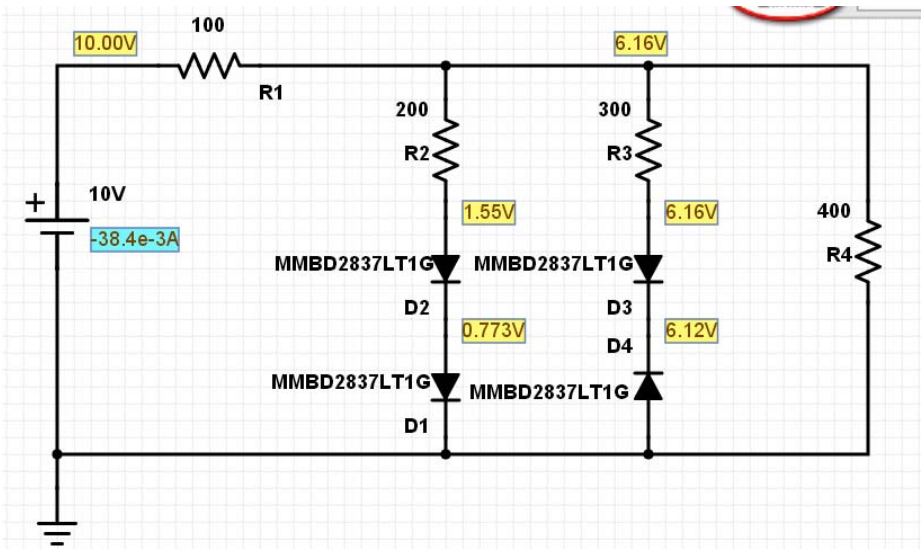

A Piranah RGB LED has the follwing characteristics:

- Red: Vf = 1.9V, 8000 mcd @ 20mA
- Green: Vf = 3.0V, 8000 mcd @ 20mA
- Blue: Vf = 3.0V, 8000 mcd @ 20mA

3) Design a circuit which output purple light

- Red = 2000mcd,
- Green = 0mcd,
- Blue = 8000 mcd

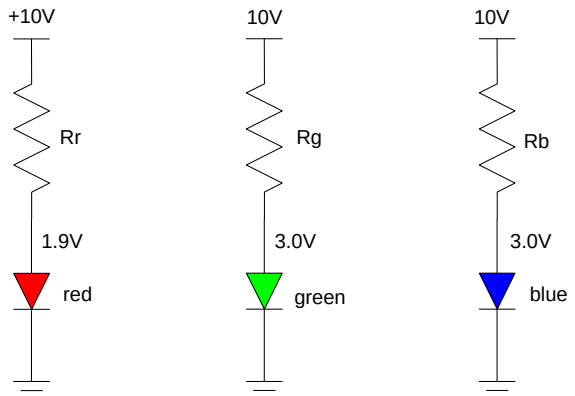

	Red	Green	Blue
mcd	2,000	0	8,000
Vf	1.9	3	3
I (mA)	5	0	20
R (Ohms)	1,620	infinite	350

4) Design a circuit which outputs gold light

- Red = 8000mcd
- Green = 6300 mcd
- Blue = 2800 mcd

	Red	Green	Blue
mcd	8,000	6,300	2,800
Vf	1.9	3	3
I (mA)	20	15.75	7
R (Ohms)	405	444.44	1,000

Lab: Build a clipper circuit

Requirements:

- Input: 0 to 10V DC, capable of 100mA
- Output: 0 to 10V DC, capable of driving a 1M resisance (10uA)
- Relationship: Approximate $Y = \sqrt{X} \quad \pm 1V$

5) Analysis: Design a circuit to meet the above requirements.

First, draw a straifght-line approximation to the curve (shown in red)

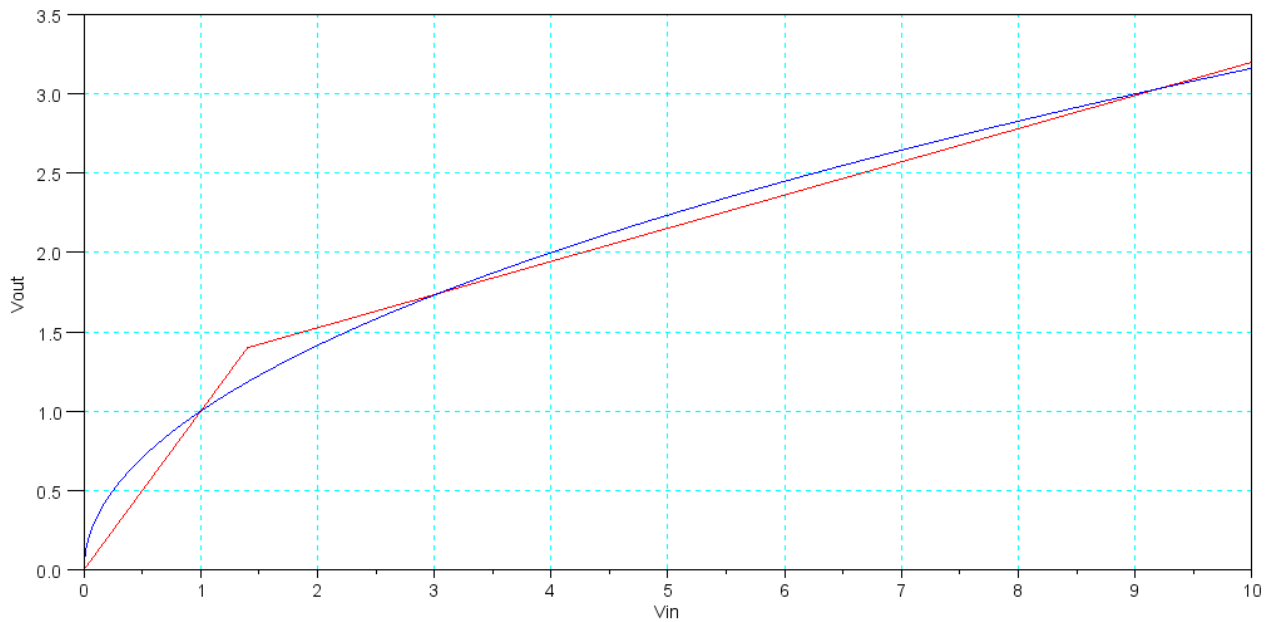

Generate the slope using voltage division

Vout < 1.4V:

Slope = 1

$$\left(\frac{R}{R+1000}\right) = 1$$

R = infinity

Vout > 1.4V

Slope = 0.2093

$$\left(\frac{R}{R+1000}\right) = 0.2093$$

$$R = \left(\frac{0.2093}{1-0.2093}\right) 1000\Omega = 264\Omega$$

6) Test: Test your circuit in simulation (PartSim or similar program. Note you may need to check seceral points).

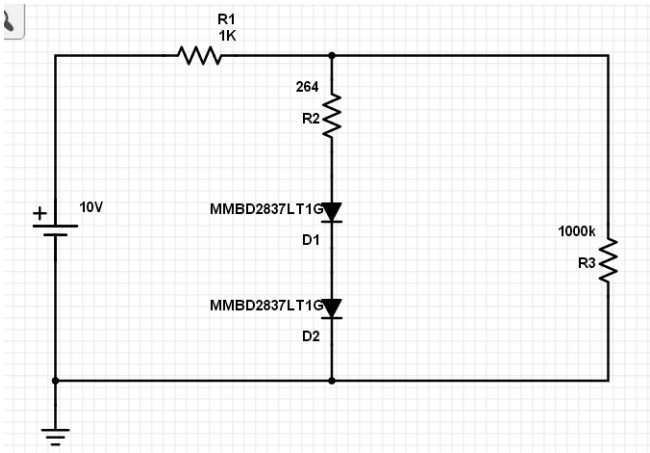

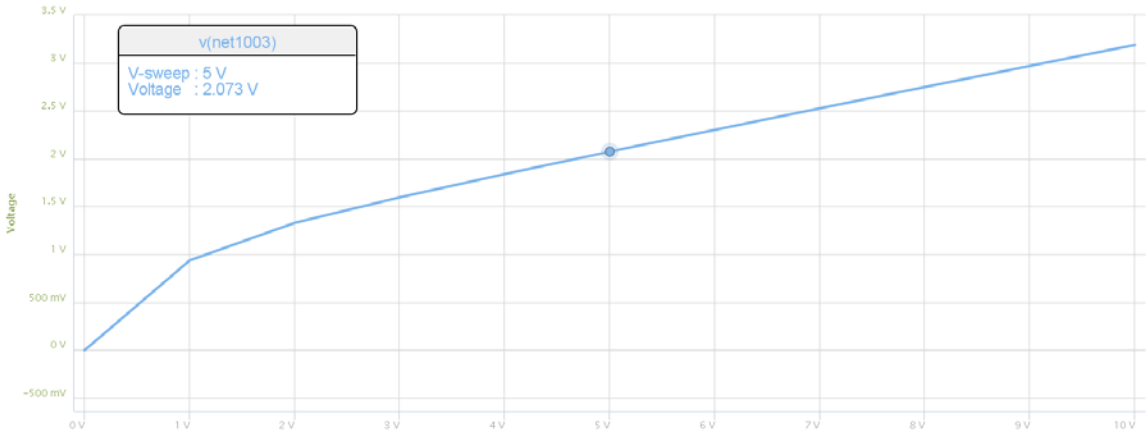

Vin	0V	1V	3V	5V	7V
Vout (theory)	0	1	1.73	2.15	2.57
Vout (PartSim)	0	0.94	1.6	2.07	2.53
Vout (Lab)	-	-	-	-	-

7) Validation: Build your circuit and test it in lab. Note: It makes the write-up easier if you measure the input / ouput voltages at the same points you simulated.