ECE 320 - Homework #7

Boolean Logic, DTL Logic, TTL Logic. Due Monday, February 29th

1) Determine a circuit to impliment Y(A,B,C,D) using NAND gates (circle the ones)

AB \ CD	00	01	11	10
00	x	0	0	0
01	1	1	0	0
11	1	1	1	0
10	1	1	1	x

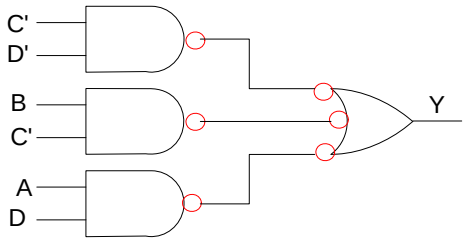

2) Determine a circuit to impliment Y(A,B,C,D) using NOR gates (circle the zeros)

AB \ CD	00	01	11	10
00	x	0	0	0
01	1	1	0	0
11	1	1	1	0
10	1	1	1	x

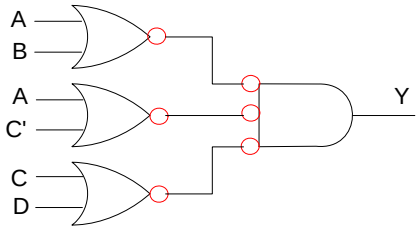

3) Determine the voltages and the currents through each diode for the following DTL circuit when

3a) A = B = 5V.

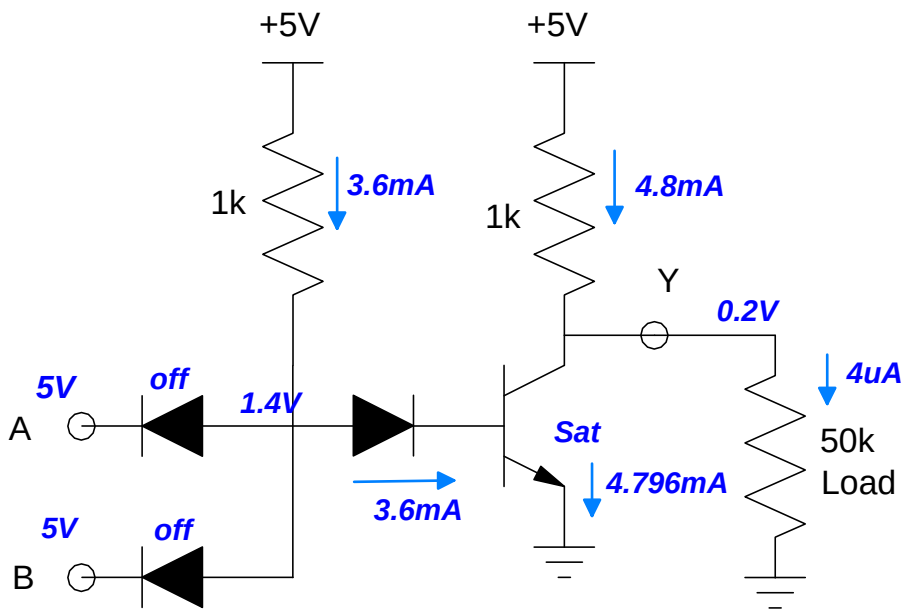

3b) A = 5V, B = 0V

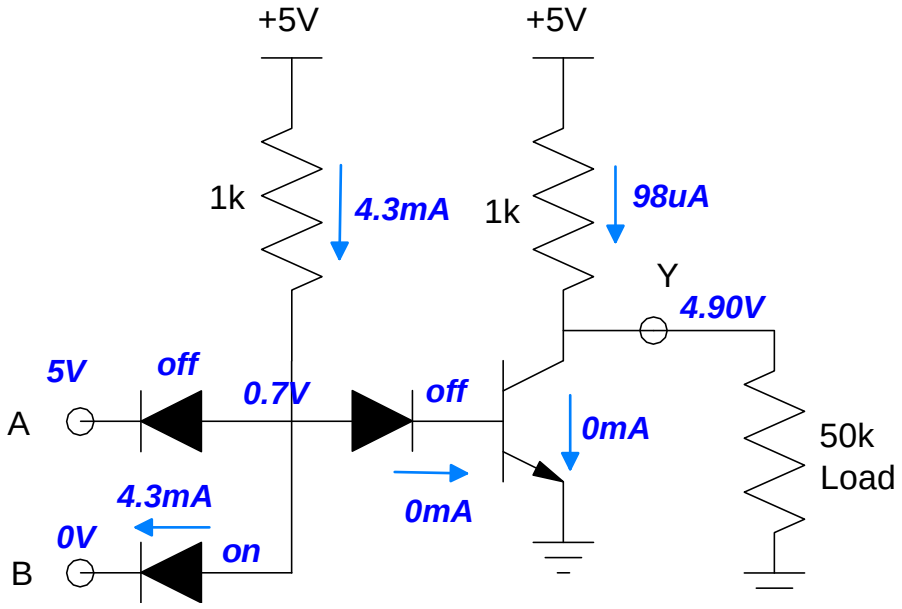

4) Determine the voltages and the currents through each diode for the following DTL circuit when

4a) A = 5V.

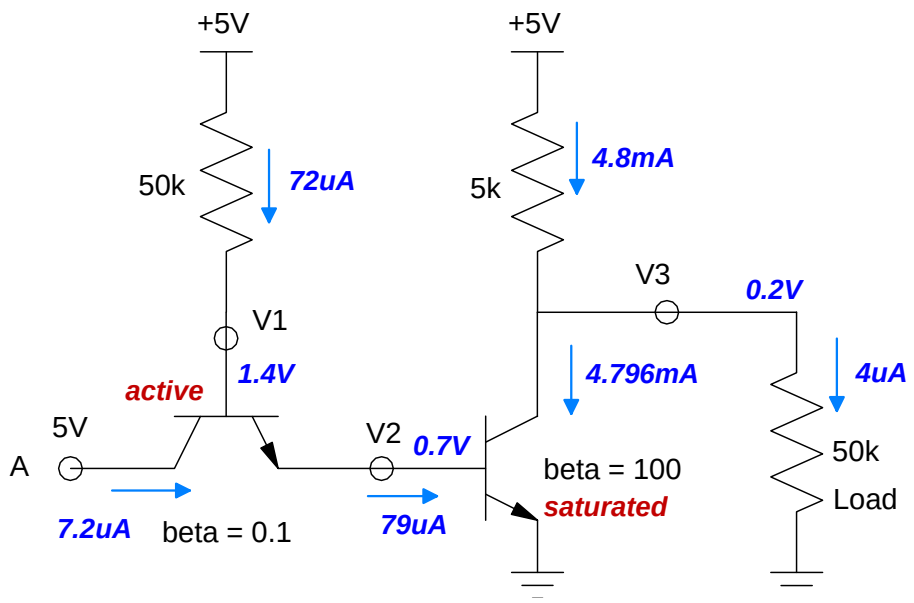

4b) A = 0V

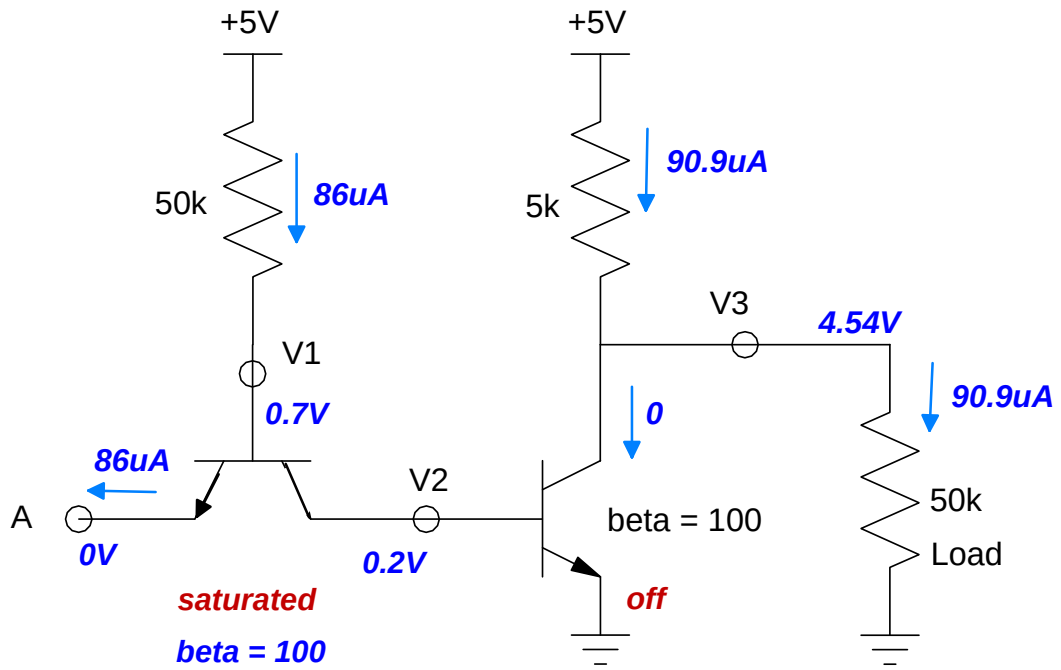

Lab: For one of these circuits (DTL, TTL)

5) Simulate in PartSim to test your analysis

6) Build in lab to validate your design