ECE 320 - Homework #2

PN Junction, Diode VI Charactersitics. Due Monday, Jan 25th

$$V_d = 0.052 \cdot \ln(10^8 I_d + 1) \qquad I_d = 10^{-8}\left(\exp\left(\frac{V_d}{0.025}\right) - 1\right)$$

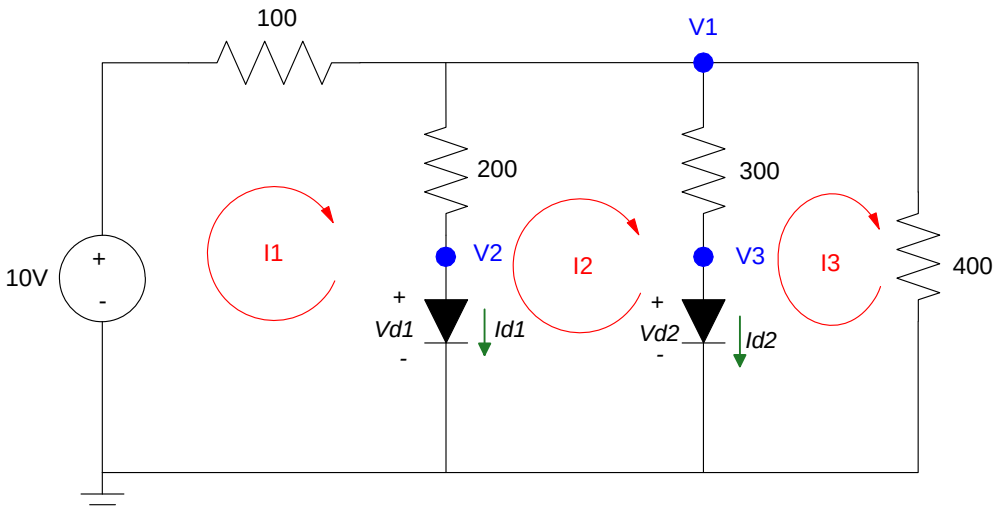

1) Write the current loop equations

$$V_{d1} = 0.052 \cdot \ln(10^8 (I_1 - I_2) + 1)$$

$$V_{d2} = 0.052 \cdot \ln(10^8 (I_2 - I_3) + 1)$$

Loop I1:

$$-10 + 100 I_1 + 200(I_1 - I_2) + V_{d1} = 0$$

Loop I2

$$-V_{d1} + 200(I_2 - I_1) + 300(I_2 - I_3) + V_{d2} = 0$$

Loop I3

$$-V_{d2} + 300(I_3 - I_2) + 400 I_3 = 0$$

2) Write the voltage node equations

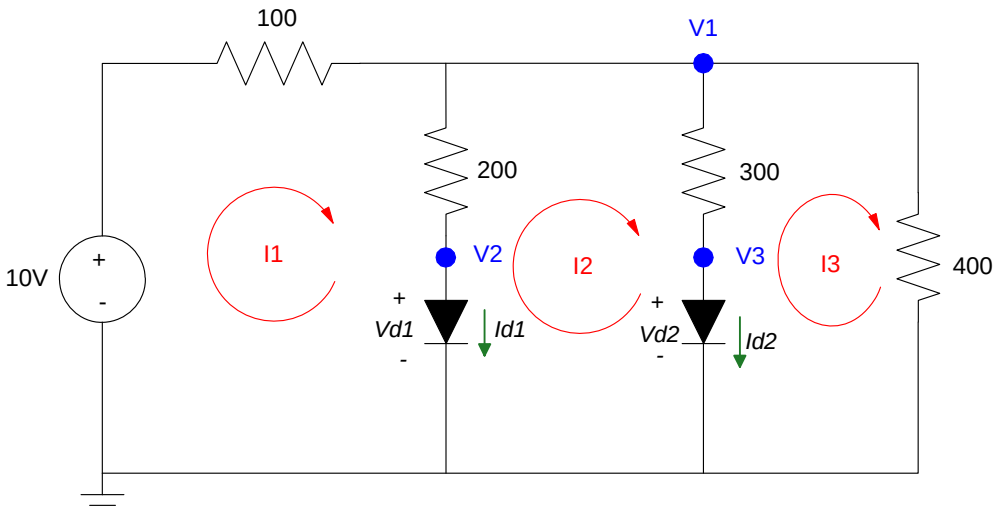

$$I_{d1} = 10^{-8}\left(\exp\left(\frac{V_2}{0.025}\right) - 1\right)$$

$$I_{d2} = 10^{-8}\left(\exp\left(\frac{V_3}{0.025}\right) - 1\right)$$

Node V1:

$$\left(\frac{V_1 - 10}{100}\right) + \left(\frac{V_1 - V_2}{200}\right) + \left(\frac{V_1 - V_3}{300}\right) + \left(\frac{V_1}{400}\right) = 0$$

Node V2:

$$\left(\frac{V_2 - V_1}{200}\right) + I_{d1} = 0$$

Node V3:

$$\left(\frac{V_3 - V_1}{300}\right) + I_{d2} = 0$$

3) Write the current loop equations

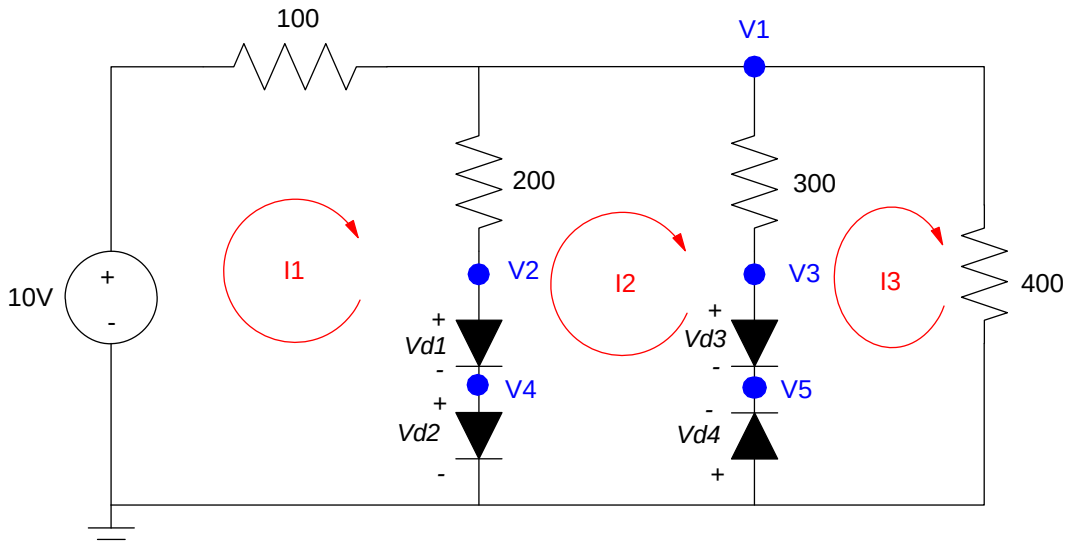

$$V_{d1} = 0.052 \cdot \ln\left(10^8(I_1 - I_2) + 1\right)$$

$$V_{d2} = 0.052 \cdot \ln\left(10^8(I_1 - I_2) + 1\right)$$

$$V_{d3} = 0.052 \cdot \ln\left(10^8(I_2 - I_3) + 1\right)$$

$$V_{d4} = 0.052 \cdot \ln\left(10^8(I_3 - I_2) + 1\right)$$

Loop I1:

$$-10 + 100I_1 + 200(I_1 - I_2) + V_{d1} + V_{d2} = 0$$

Loop I2:

$$-V_{d1} - V_{d2} + 200(I_2 - I_1) + 300(I_2 - I_3) + V_{d3} - V_{d4} = 0$$

Loop I3:

$$V_{d4} - V_{d3} + 300(I_3 - I_2) + 400I_3 = 0$$

4) Write the voltage node equations

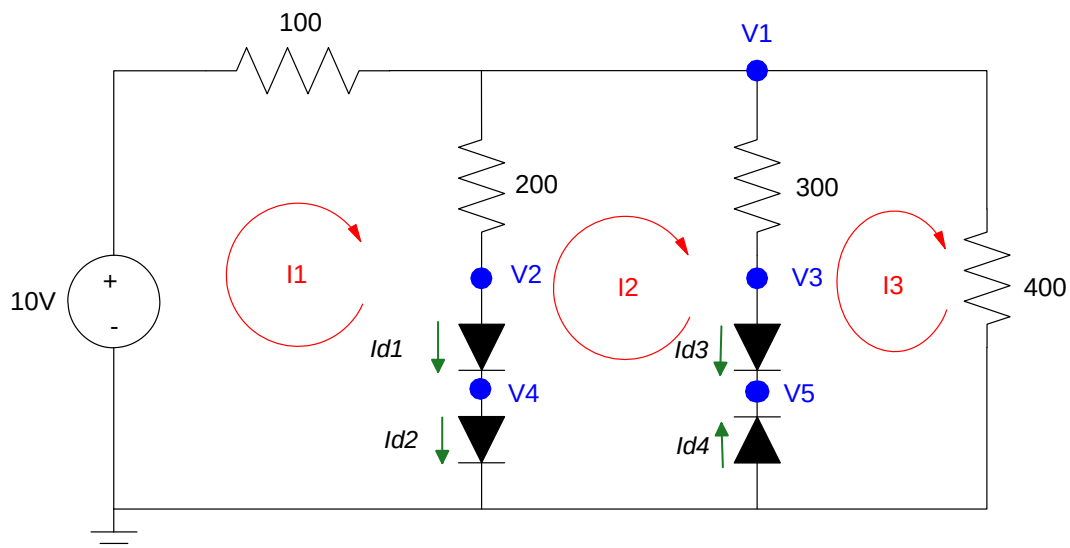

Diode Equations

$$I_{d1} = 10^{-8}\left(\exp\left(\frac{V_2 - V_4}{0.025}\right) - 1\right)$$

$$I_{d2} = 10^{-8}\left(\exp\left(\frac{V_4}{0.025}\right) - 1\right)$$

$$I_{d3} = 10^{-8}\left(\exp\left(\frac{V_3 - V_5}{0.025}\right) - 1\right)$$

$$I_{d4} = 10^{-8}\left(\exp\left(\frac{-V_5}{0.025}\right) - 1\right)$$

Voltage Node Equations:

$$\left(\frac{V_1 - 10}{100}\right) + \left(\frac{V_1 - V_2}{200}\right) + \left(\frac{V_1 - V_3}{300}\right) + \left(\frac{V_1}{400}\right) = 0$$

$$\left(\frac{V_2 - V_1}{200}\right) + I_{d1} = 0$$

$$I_{d1} = I_{d2}$$

$$\left(\frac{V_3 - V_1}{300}\right) + I_{d3} = 0$$

$$I_{d3} + I_{d4} = 0$$