ECE 320: Final Name _____

Part 1: Semiconductors and Diodes - March 23, 2017

1) The VI characteristics for a red LED are given below. Draw the load-line and determine the current and voltage for the following circuit.

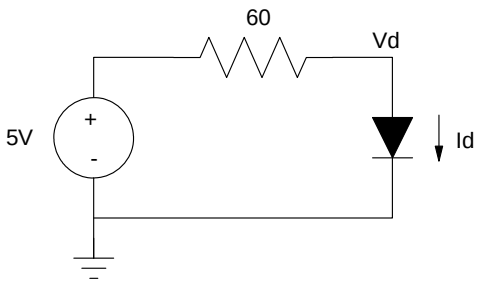

Load Line	Vd	Id
show on graph	**1.75V**	**53mA**

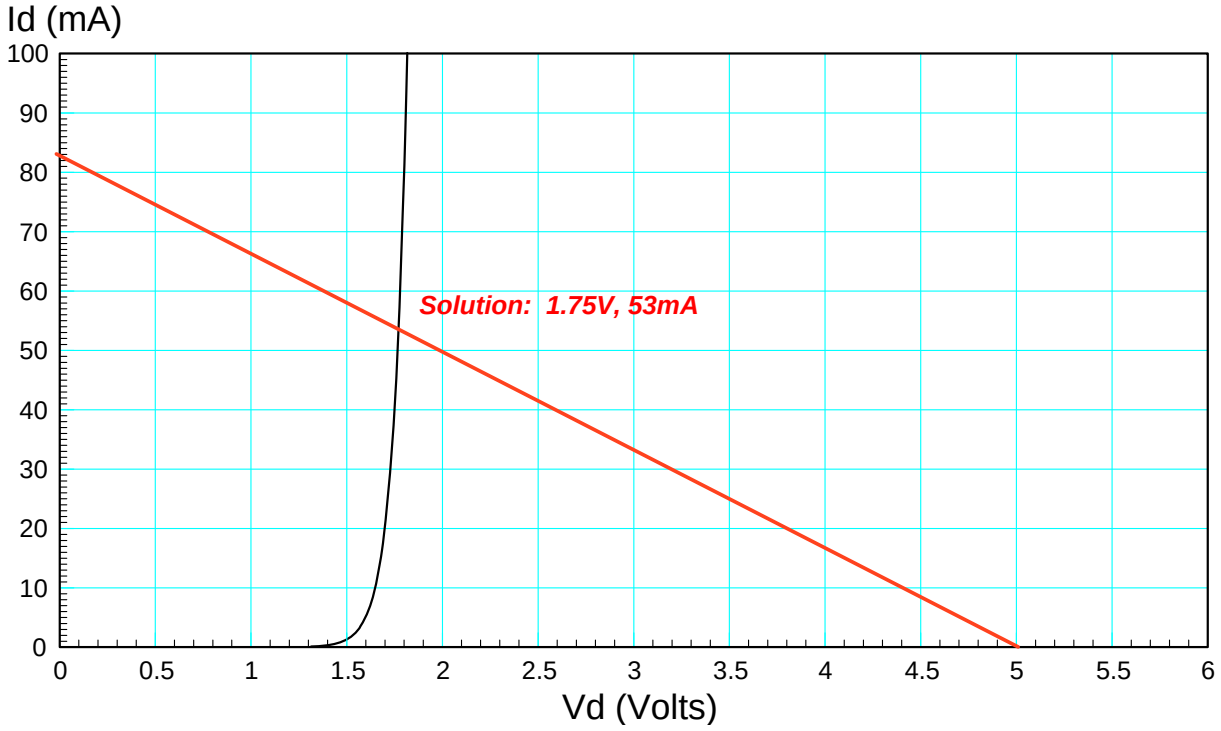

2) Assume ideal diodes with Vf = 0.7V. Determing the currents I1 .. I4

I1	I2	I3	I4
58mA = 79mA - I2 - I3 - I4	**3.5mA**	**7.0mA**	**10.5mA**

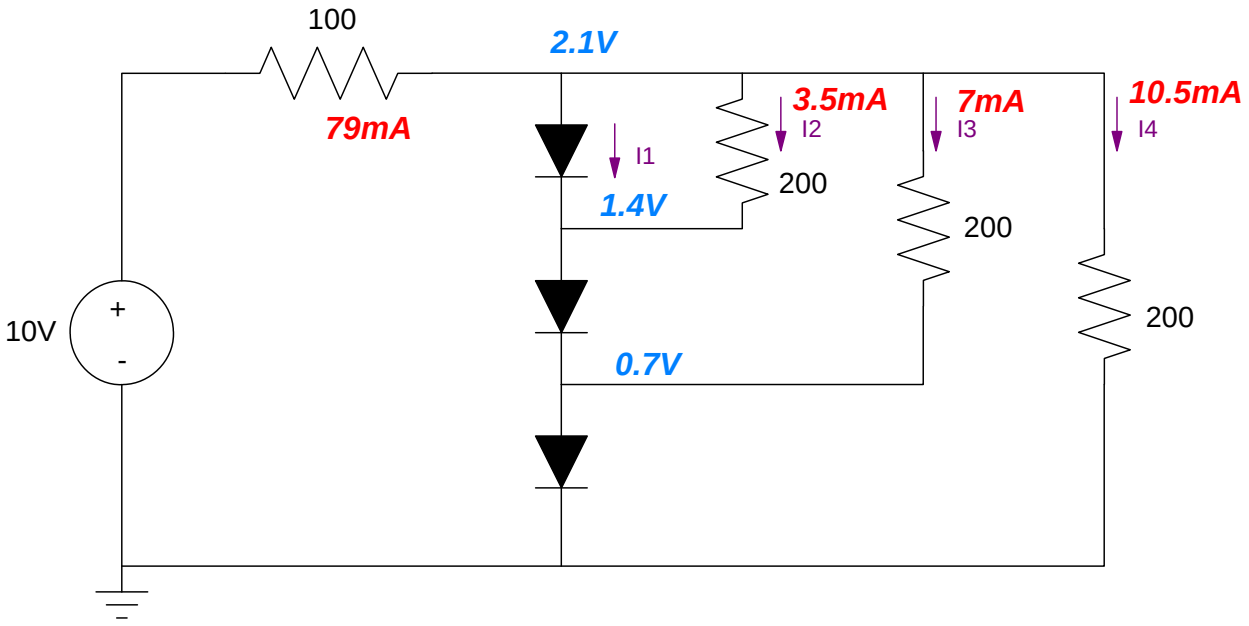

3) Max/Min: Determine the currents, I1, I2, I3, I4 for the following max/min circuit. Assume ideal silcon diodes (Vf = 0.7V)

I1	I2	I3	I4
0 mA	**2.42mA** 3.3mA - 0.88mA	**0.88mA**	**0 mA**

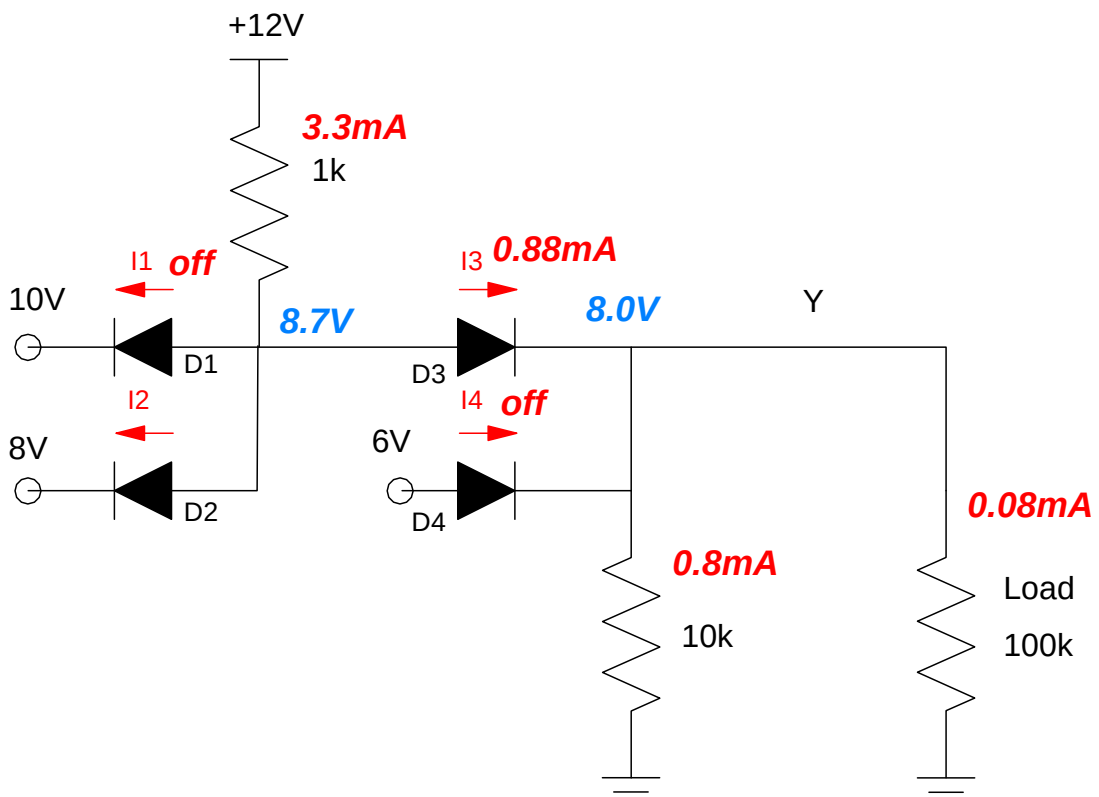

4) AC to DC Converter. Assume ideal silicon diodes with Vf = 0.7V. Find R, L, and C for the following 1/2 wave AC to DC converter which results in

- 100mA to the load
- 2Vpp ripple at V1
- 1Vpp ripple at V2

V2 (DC)	R 100mA to load	C 2Vpp @ V1	L 1Vpp @ V2
4.3V max = 5.3V min = 3.3V (2V ripple) avg = 4.3V	**43 Ohms**	**833uA** 100mA = C (2V) / (1/60s)	**228mH** j w L = j86 Ohms 2x R reduces the ripple 2x

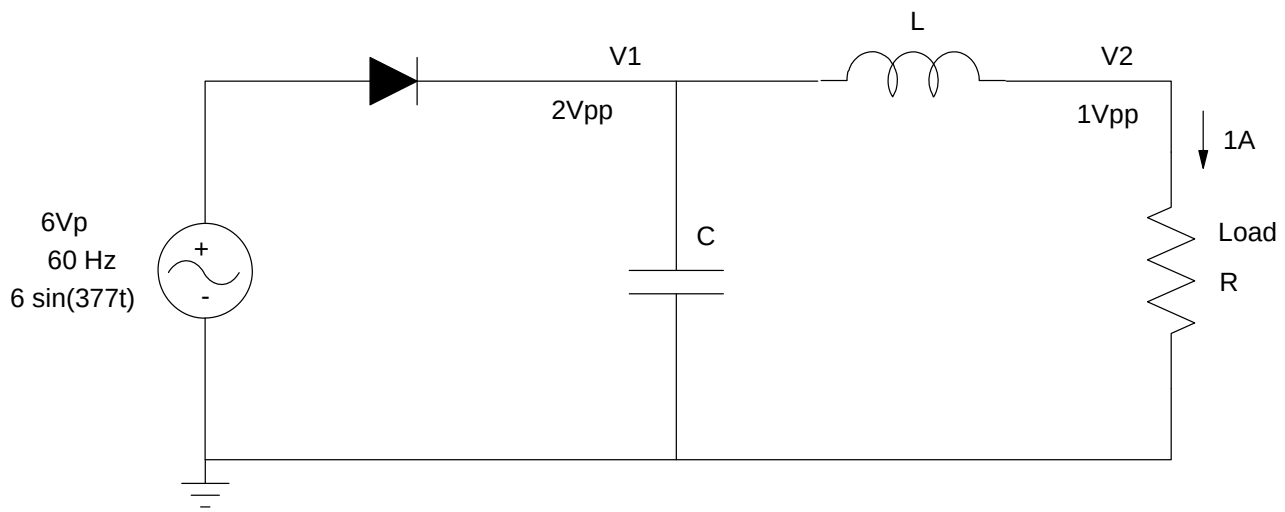

5) A 10V peak, 60Hz sine wave drives an AC to DC converter with a firing angle of 90 degrees, resulting in

$$V_1(t) = \begin{cases} 8.6\sin(377t) & 90^0 < 377t < 180^0 \\ -0.7V & otherwise \end{cases}$$

Determine the following:

DC Voltage @ V1	AC Voltage at V1 V1pp	AC Voltage at V2 if C = 0 (V2pp)	AC Voltage at V2 C = 25uV (V2pp)
5.921V	**9.3Vpp** (10V - 1.4V) + 0.7V	**246.6mVpp** 20 / (20+j754) * 9.3V	**232.8mVpp** -j53 || 20 = 18.7 Ohms Then use voltage division

$$\frac{1}{\pi}\int_{\pi/2}^{\pi}(18.6\sin(t))dt = \frac{18.6}{\pi}(-\cos(t))_{\pi/2}^{\pi} = \frac{18.6}{\pi} =$$

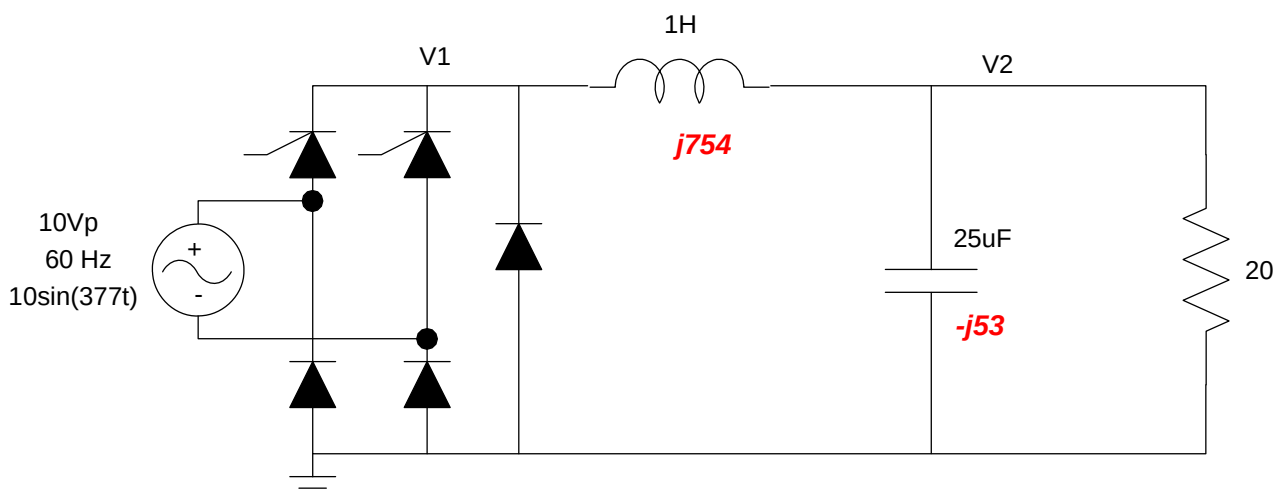

Bonus! According to NREL, there is enough wind energy in North Dakota to produce 1.1 trillion kWh of electricity every year, which is worth $110 billion at 10 cents / kWh. To put this in perspective, what is the entire gross domestic product of North Dakota?

$51 billion / year (2015)