ECE 320: Quiz #3: Name _____ 9:00 - 11:00

Diodes, Ideal Diodes. February 2, 2017

1) Assume the VI characteristics for a diode are given in the following graph. Draw the load line for the following circuit and determine the voltage and current for the diode.

Load Line	Vd	Id
show on graph	0.7V	72mA

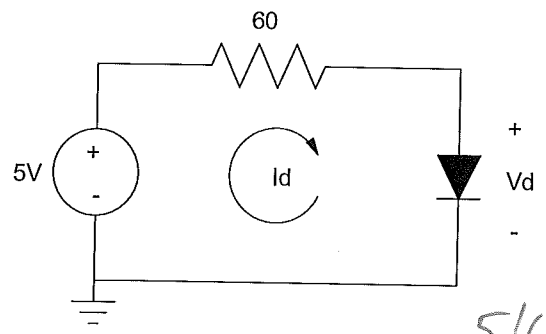

5/60 = 83.3mA

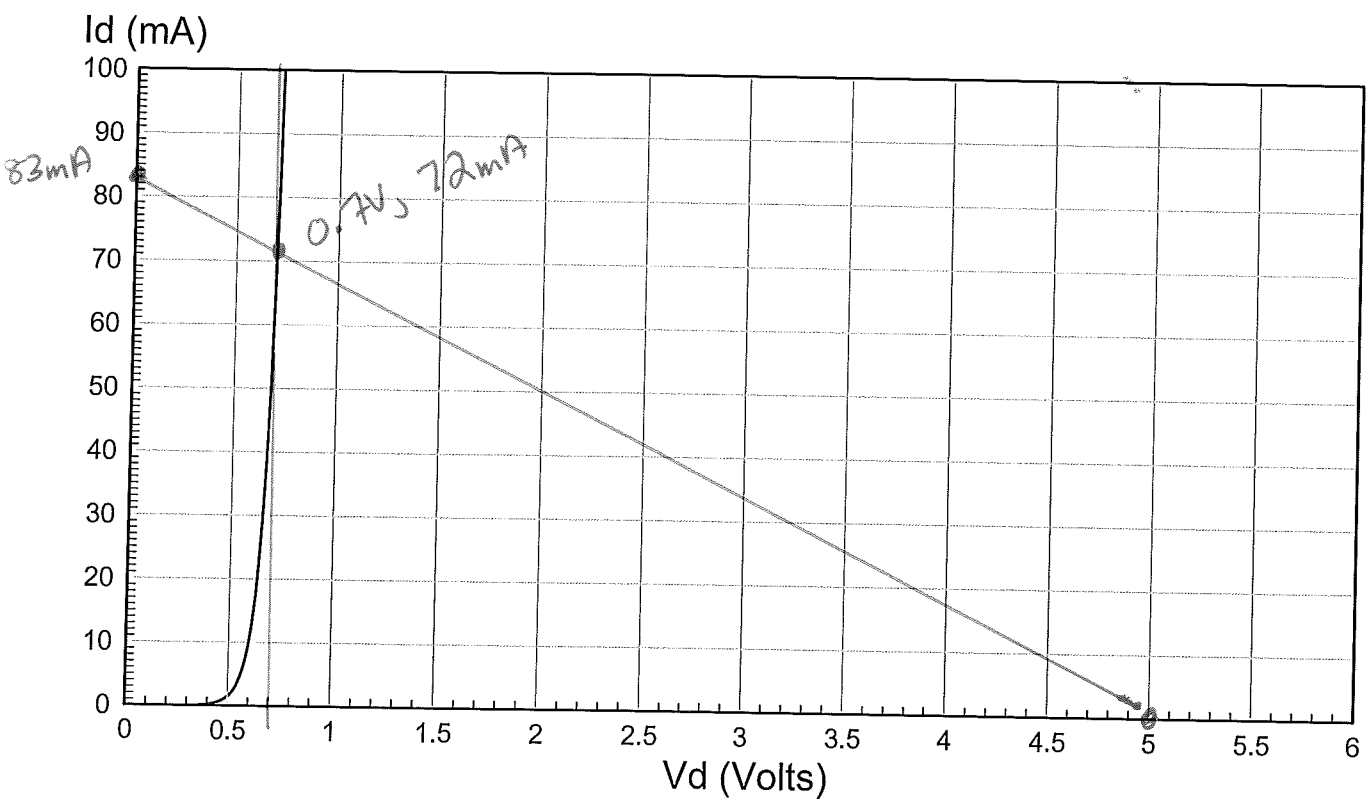

2) Assume an ideal diode with Vf = 0.7V. Determine the voltage and current for the following circuit.

Vd	Id
0.7V	71.7 mA

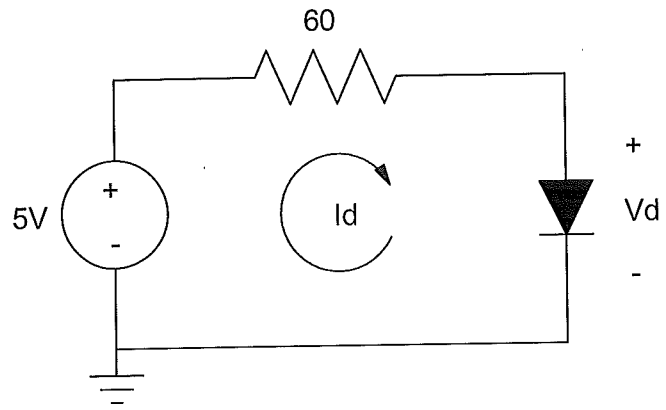

$$I_d = \frac{5-0.7}{60} = 71.7\,mA$$

3) Write N equations to solve for N unknowns for the following circuit. Assume the VI characteristics for the diodes are:

$$V_d = 0.052 \ln(10^7 I_d + 1) \qquad I_d = 10^{-7}\left(\exp\left(\frac{V_d}{0.052}\right) - 1\right)$$

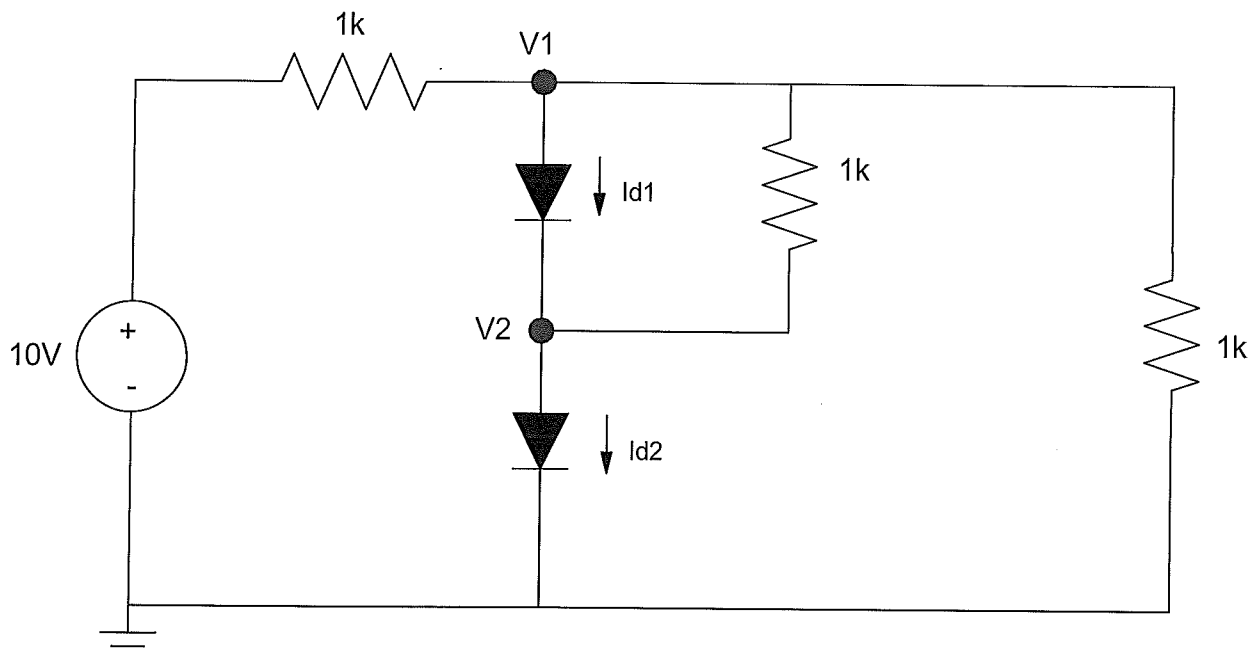

$I_{d1} = 10^{-7}\left(\exp\left(\frac{V_1 - V_2}{.052}\right) - 1\right)$
$I_{d2} = 10^{-7}\left(\exp\left(\frac{V_2}{.052}\right) - 1\right)$
$\frac{V_1 - 10}{1000} + I_{d1} + \frac{V_1 - V_2}{1000} + \frac{V_1}{1000} = 0$
$-I_{d1} + I_{d2} + \frac{V_2 - V_1}{1000} = 0$

4) Assume ideal diodes with Vf = 0.7V. Determine the currents I1, I2, I3, and I4

I1	I2	I3	I4
8.6mA	6.5mA	0.7mA	1.4mA

$\frac{10-1.4}{1000}$ remainder $\frac{1.4-0.7}{1000}$

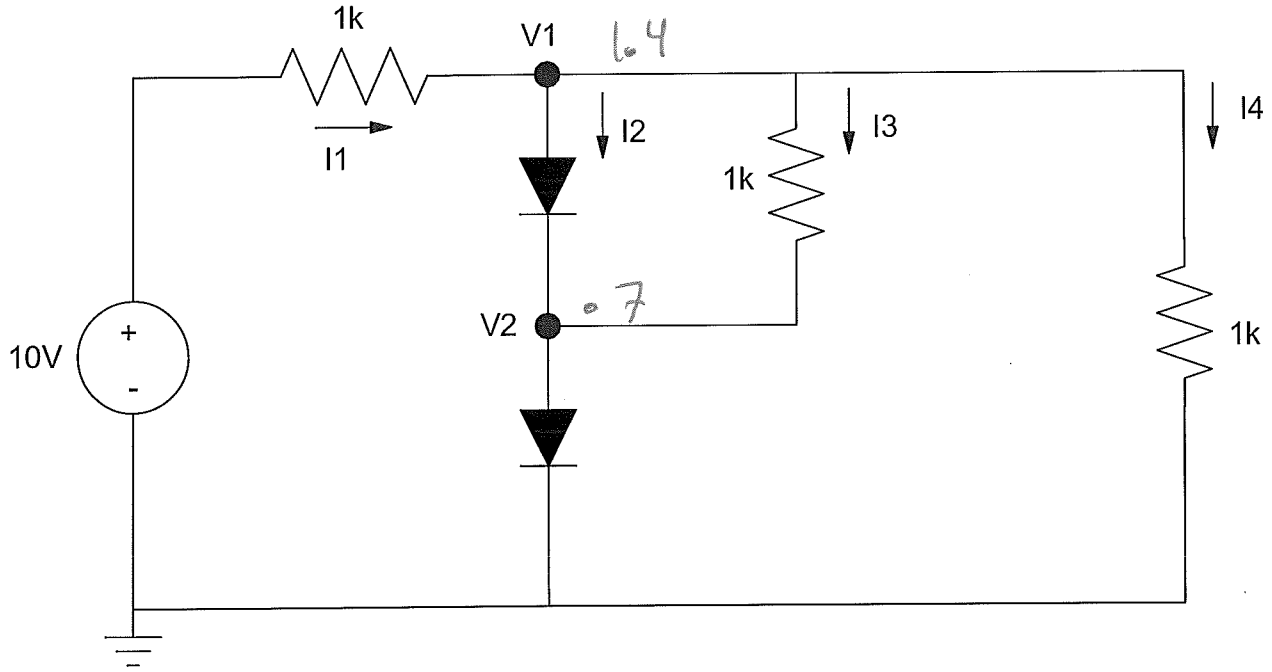

5) Assume ideal diodes with Vf = 0.7V. Determine the currents I1, I2, I3, and I4

I1	I2	I3	I4
1.1mA	0	0.2mA	0.9mA

$\frac{2-.9}{1000}$ off

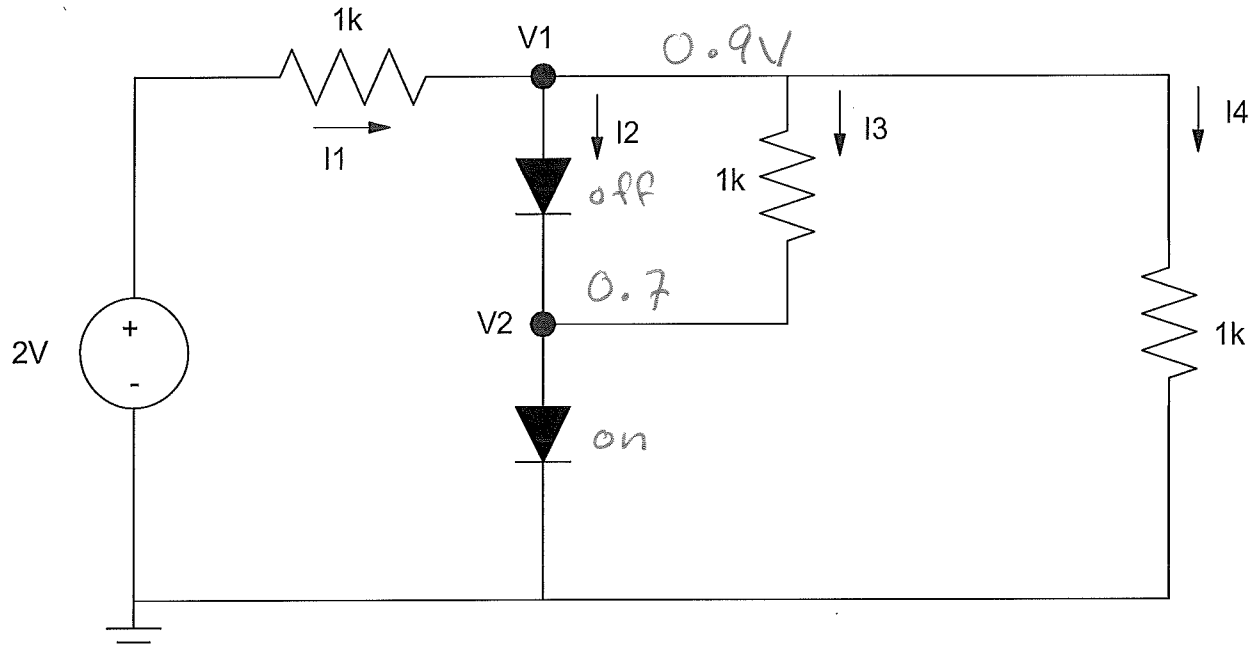

$$\frac{V_1 - 2}{1000} + \frac{V_1 - .7}{1000} + \frac{V_1}{1000} = 0$$

$$3V_1 = 2.7$$

$$V_1 = 0.9V$$

Assume a 600kW wind turbine, which costs $600,000 to build, outputs on average 300kW of electricity.

- How many kWh of energy will that wind turbine produce over 10 years (the expected life of a typical wind turbine)?
- How many pounds of coal will that offset (1 pound of coal produces 1kWh of electricity)
- What is the gross revenue for this wind turbine assuming 10 cents a kWh for electricity?

(source: Danish Wind Energy Association)

(300kw)(24hr)(365d)(10y) = 26.28 million kwhr

= 26.28 million lb coal

= $2.628 million