ECE 320: Quiz #4 Name _____ 9:00 / 11:00

LEDs, Clipper, Max Min Circuits - February 10, 2017

1) An RGB LED has the following specifications:

	Vf @ 20mA	mcd @ 20mA
Red	2.2V	8,000
Green	3.2V	8,000
Blue	3.2V	8,000

Find the resistors which will result in Viking Purple:

	Desired mcd	Current (mA)	Resistor
Red	3,011	7.52	1036
Green	470	1.175	5787
Blue	6,086	15.21	447

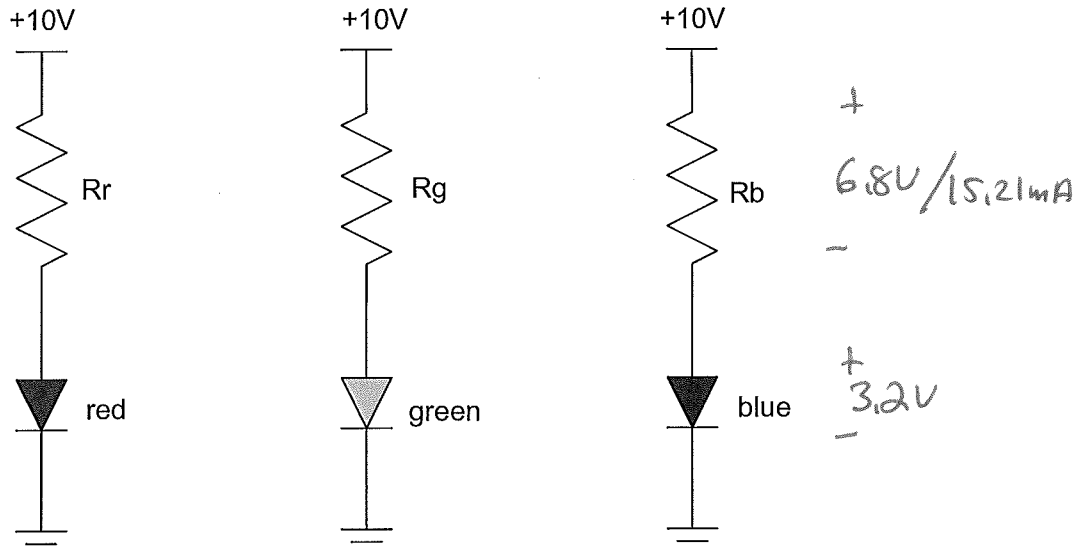

2) Determine the currents, I1 - I4 for the following min/max circuit

I1	I2	I3	I4
10.3mA	0	0	473μA

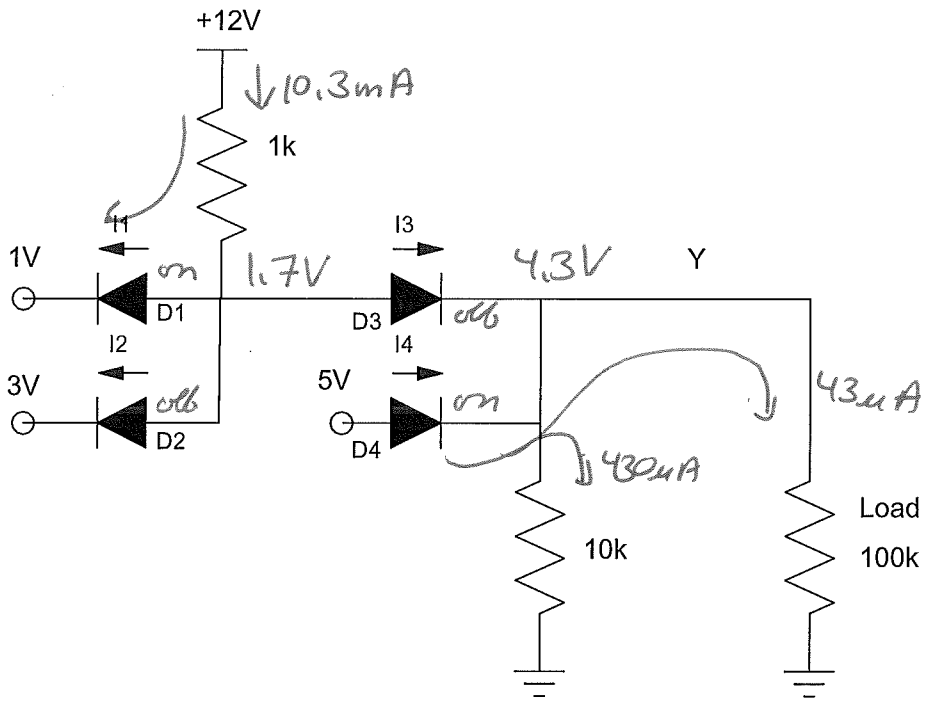

3) Determine the currents, I1 - I4 for the following min/max circuit

I1	I2	I3	I4
0	2.42mA	880uA	0

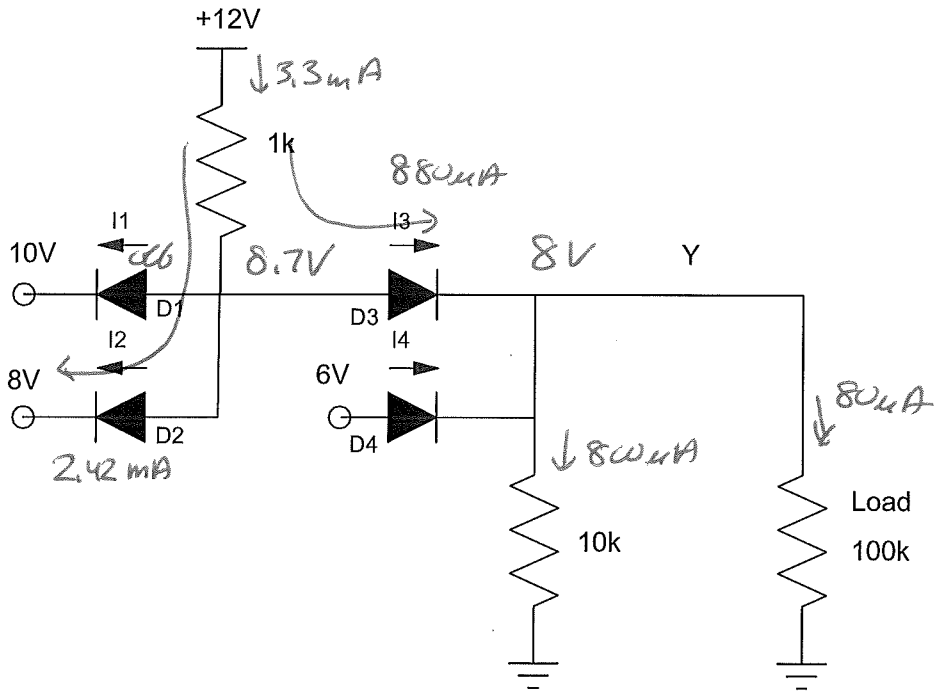

4) Determine R and Vz so that the following circuit approximates the following function:

R1	Vz1	R2	Vz2
1k	N	333	3V

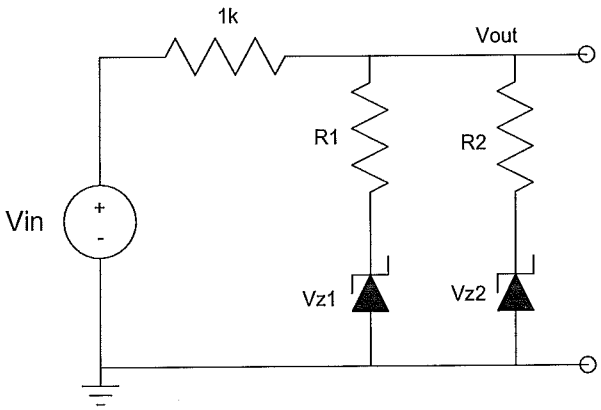

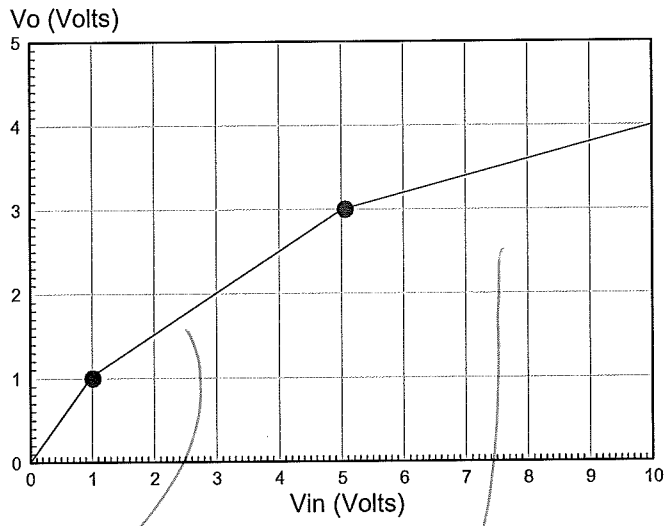

slope = $\frac{1}{2}$

$\left(\frac{R_1}{R_1+1k\Omega}\right) = \frac{1}{2}$

$R_1 = 1K$

slope = 1/5

$\frac{R}{R+1k} = \frac{1}{5}$

$R = 250$

$R = R_1 \| R_2$

$R_2 = 333$

5) Design a circuit to clip the output at +5V and -4V

$$Y = \begin{cases} +5V & X > 5V \\ X & -4V < X < +5V \\ -4V & X < -4V \end{cases}$$

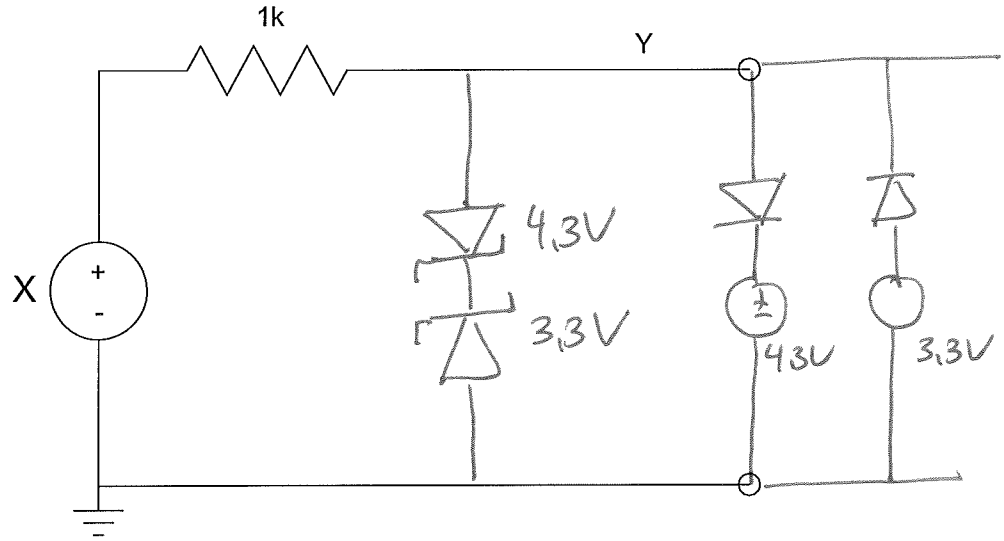

Bonus! According to the U.S. Energy and Information Administration, the cost to produce 1kWh of electricity with fossil fuels, ignoring construction, pollution, and cleanup costs, is:

- Coal: 2.00 cents / kWh
- Gas: 7.50 cents / kWh
- Oil: 8.75 cents / kWh

What is the cost to produce 1kWh of electricity from wind if you *include* the cost of construction, pollution, and cleanup? 1.3 to 3.93 cents / kWh

600kW @ 31% operation = 3.93 cents / kWh
less for larger / higher operation wind turbines