ECE 320: Quiz #5 Name _____ 9:00 / 11:00

AC to DC and DC to DC Converters - February 16, 2017

1) 1/2 Wave AC to DC: Analysis: For the following AC to DC converter, determine

- The peak-to-peak ripple at Vc
- The peak-to-peak ripple at Vr
- The DC voltage at Vr

Peak voltage at V1	Peak-to-peak voltage at V1	Peak-to-peak voltage at V2	Current I2
14.3V	238mVpp	31.3mVpp	286mA

peak

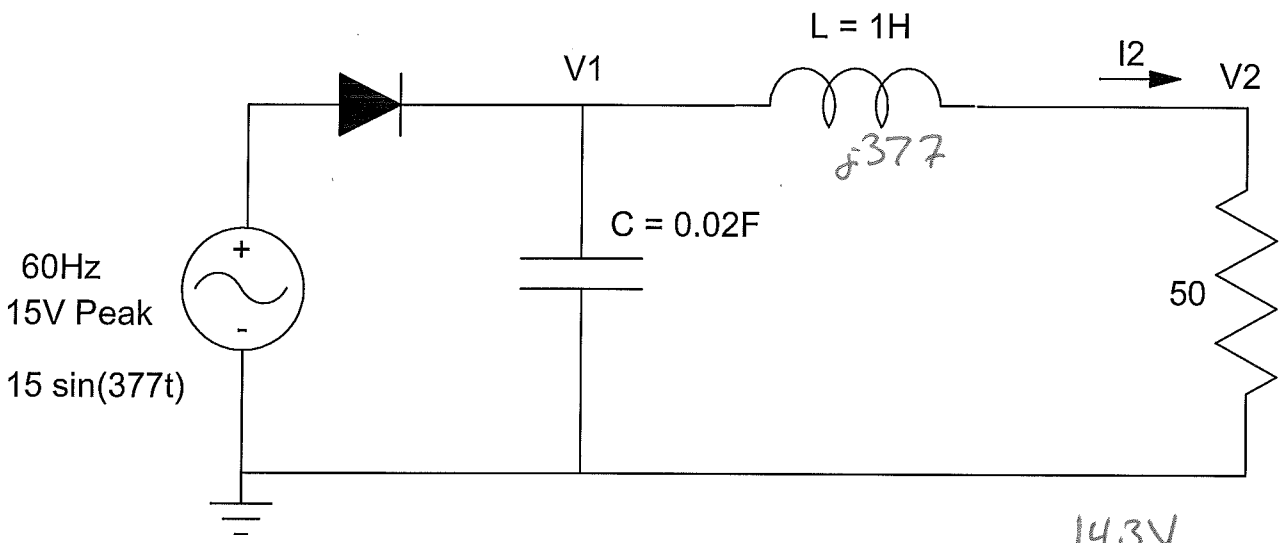

$$\frac{14.3V}{50\,\Omega} = 286mA$$

$$I = C\frac{dV}{dt}$$

$$.286 = .02\,\frac{dV}{1/60}$$

$$dV = .2383$$

$$V_2 = \left(\frac{50}{50+j377}\right)(.238)$$

$$V_2 = .0313\angle -82^\circ$$

2) 1/2 Wave AC to DC: Design an AC to DC converter which results in

- 100mA to the load
- With 2Vpp ripple at V1 and
- 500mVpp ripple at V2

V1 peak	R 100mA to load	C 2Vpp @ V1	L 500mVpp @ V2
14.3V	143Ω	833μF	1.51H

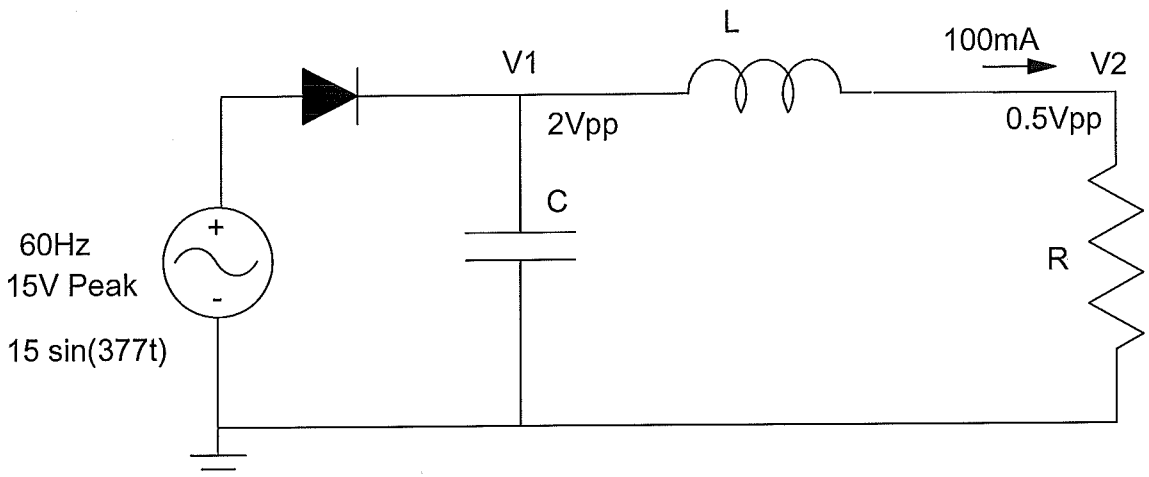

$$\frac{14.3V}{100mA} = 143\Omega$$

$$I = C\frac{dV}{dt}$$

$$.1 = C\frac{2V}{1/60}$$

$$C = 833\mu F$$

$$\omega L = 4 \cdot R$$

$$\omega L = 572$$

$$L = \frac{572}{377} = 1.51H$$

3) Buck Converter. Analysis. Assume the duty cycle of the following Buck converter is 30% (30% closed, 70% open) @ 1kHz. Determine the following:

V1 (DC) The average voltage at V1	V1 (AC) The peak-to-peak voltage at V1	V2 (DC) The average voltage at V2	V2 (AC) The peak-to-peak voltage at V2
3.11V	12.7V	3.11V	325mV ← more accurate
3.60V	12V	3.60V	307mV

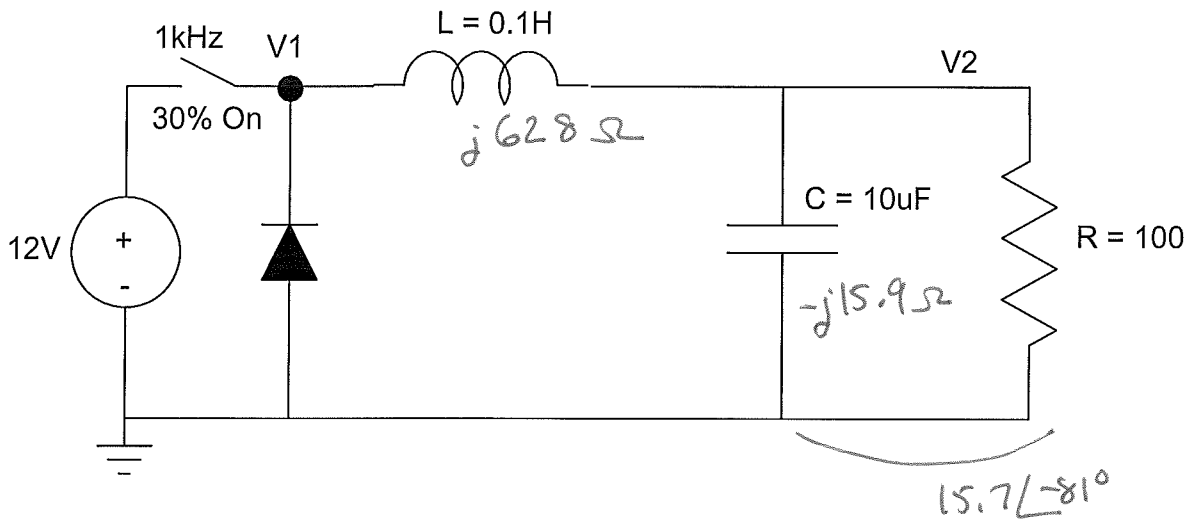

$$V_{avg} = (.3 * 12) + (.7 \cdot (-0.7)) = 3.11V$$

R || C

100 ||

$$V_2 = \left(\frac{15.7\angle -81^\circ}{15.7\angle -81^\circ + j628}\right) 12.7$$

4) Buck Converter. Design. Design a Buck DC-DC converter which converts 12VDC to 5VDC

X Duty cycle so that V2 = 5.00V DC	V1 (AC) The peak-to-peak voltage at V1	L So that V2 = 2Vpp if C = 0	C So that V2 = 0.5Vpp
44.9% (41.7%)	12.7Vpp (12Vpp)	101mH	38.6μF

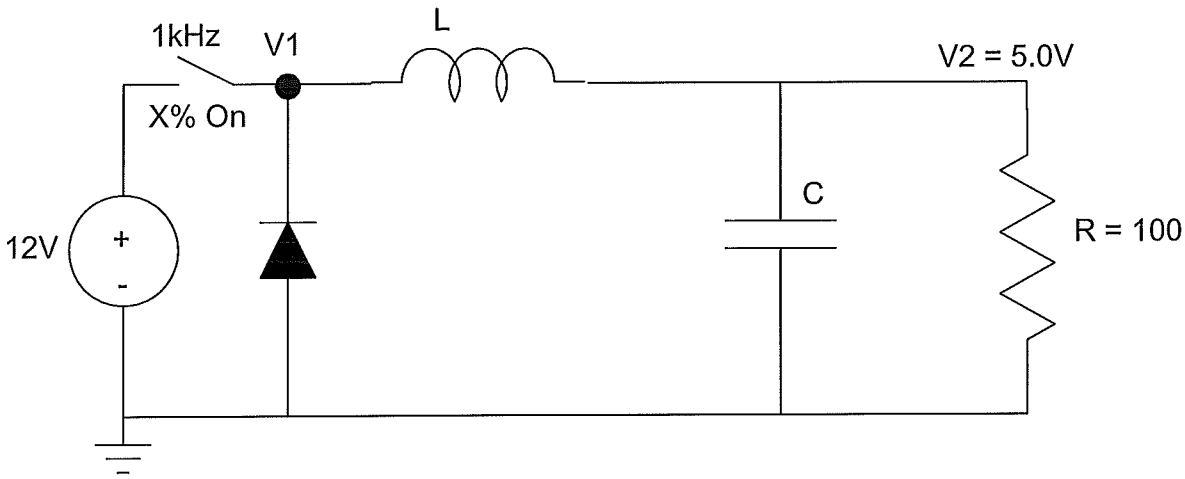

$$X = \frac{5.7}{12.7} = 44.9\% \quad \approx \frac{5}{12} = 41.6\%$$

$$|j\omega L| = \left(\frac{12.7\,V_{pp}}{2V_{pp}}\right) \cdot 100\,\Omega = 635\,\Omega$$

$$L = \frac{635}{6280} = .101\,H$$

$$\cancel{\left|\frac{1}{j\omega C}\right| = 2\left(\frac{2V}{.5V}\right)R = 4R = 25}$$

$$\left|\frac{1}{j\omega C}\right| = \frac{R}{2V/.5V} = \frac{R}{4} = 25\,\Omega$$

$$C = 38\mu F$$

5) The voltage across a 100 Ohm resistor with a Buck converter is measured as follows. Determine from this graph

The switching frequency (Hz)	The DC voltage average voltage	The AC voltage peak-to-peak voltage
57 Hz	4.32 Vdc	1.20 V_{pp}

period = 17.5 ms $f = \frac{1}{17.5\,ms} = 57\,Hz$

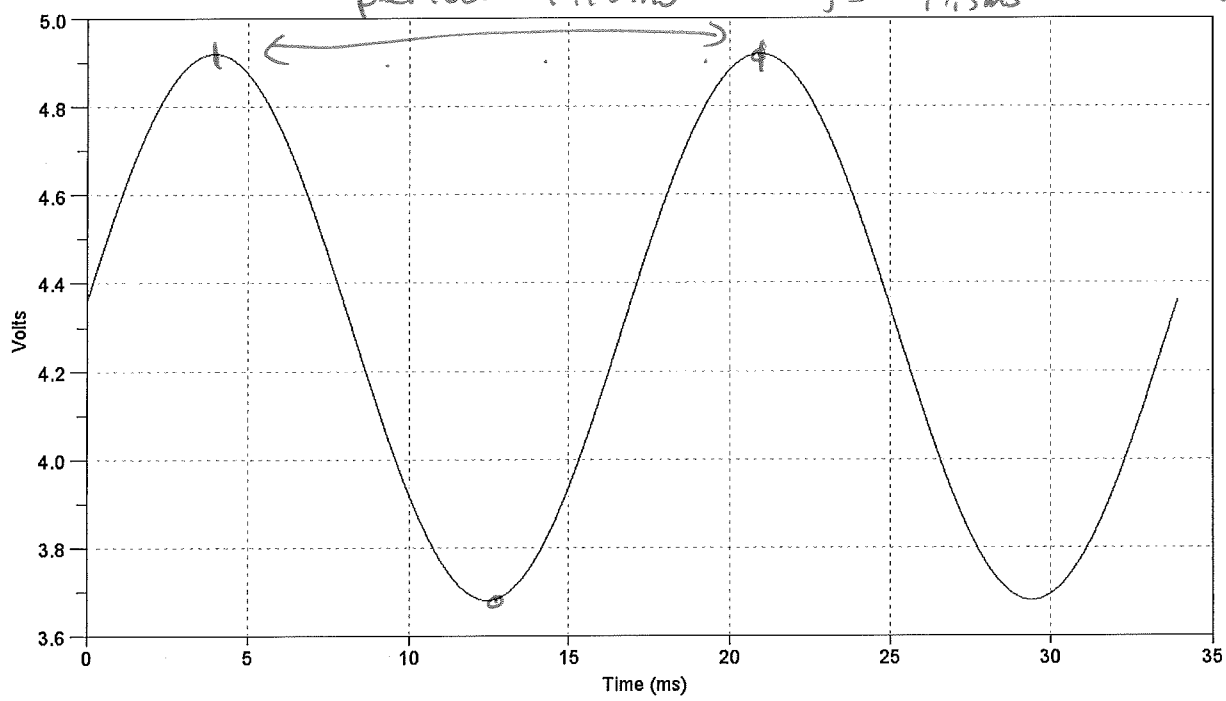

max = 4.92V

min = 3.72V

$$avg = \frac{4.92 + 3.72}{2} = 4.32V$$

$$V_{pp} = max - min = 1.20\,V_{pp}$$

Bonus! According to the U.S. Energy and Information Administration, the U.S. consumed about 4 trillion kWh of electricity in 2015. Assuming a constant load and constant wind, how many 1MW wind turbines would it take for the U.S. to be completely powered by wind energy?

$(1MW)(365d \cdot 24hr) = 8.76 \cdot 10^9$ wh/turbine

$$\frac{4 \cdot 10^{15}\ wh}{8.76 \cdot 10^9\ wh/turbine} = 456{,}600$$

It takes 456,600 wind turbines

456 Nuclear power plants