ECE 320 - Homework #1

EE 206 Review. Due Wednesday, January 18th, 2017

1) Determine the resistance between notes A and B

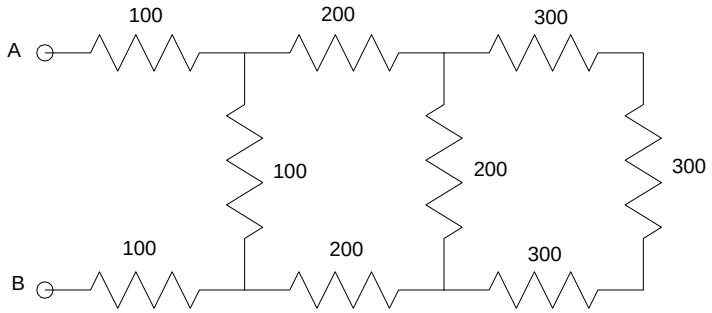

Problem 1

Starting on the right:

300 + 300 + 300 = 900 Ohms

900 || 200 = 163.63 Ohms

200 + 163.63 + 200 = 563.63 Ohms

563.63 || 100 = 84.93 Ohms

100 + 94.93 + 100 = 284.93 Ohms

ans: 284.93 Ohms

Current Loops:

2) Write the current loop equations for the following circuit

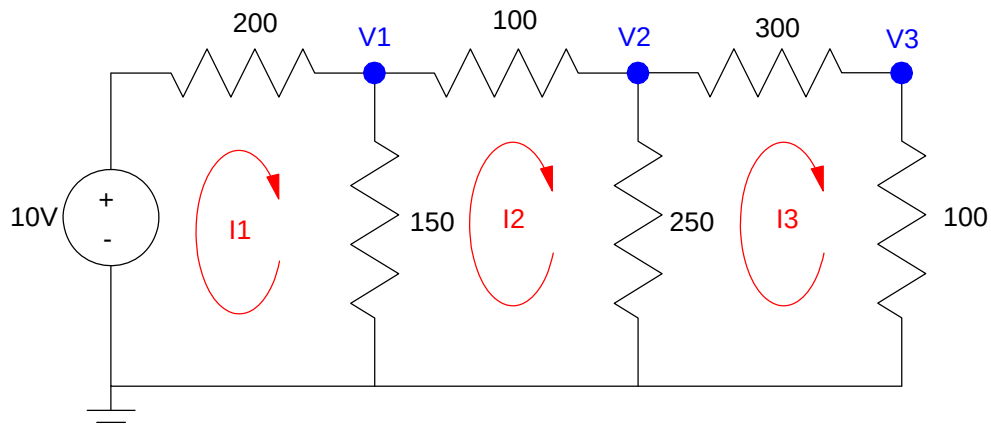

Loop I1:

$$-10 + 200I_1 + 150(I_1 - I_2) = 0$$

Loop I2:

$$150(I_2 - I_1) + 100(I_2) + 250(I_2 - I_3) = 0$$

Loop I3:

$$250(I_3 - I_2) + 300(I_3) + 100(I_3) = 0$$

3) Solve using Matlab (or similar program)

Grouping Terms:

$$350I_1 - 150I_2 = 10$$

$$-150I_1 + 500I_2 - 250I_3 = 0$$

$$-250I_2 + 650I_3 = 0$$

Put in Matrix Form:

$$\begin{bmatrix} 350 & -150 & 0 \\ -150 & 500 & -250 \\ 0 & -250 & 650 \end{bmatrix} \begin{bmatrix} I_1 \\ I_2 \\ I_3 \end{bmatrix} = \begin{bmatrix} 10 \\ 0 \\ 0 \end{bmatrix}$$

```
-->A = [350,-150,0 ; -150,500,-250 ; 0,-250,650]
 A  =

    350.   - 150.    0.
  - 150.    500.   - 250.
    0.    - 250.    650.

-->B = [10;0;0]
```

```
 B  =

    10.
    0.
    0.

-->I = inv(A)*B
 I  =

    0.0339806
    0.0126214
    0.0048544
```

4) Check your answers in PartSim (or similar circuit simulator)

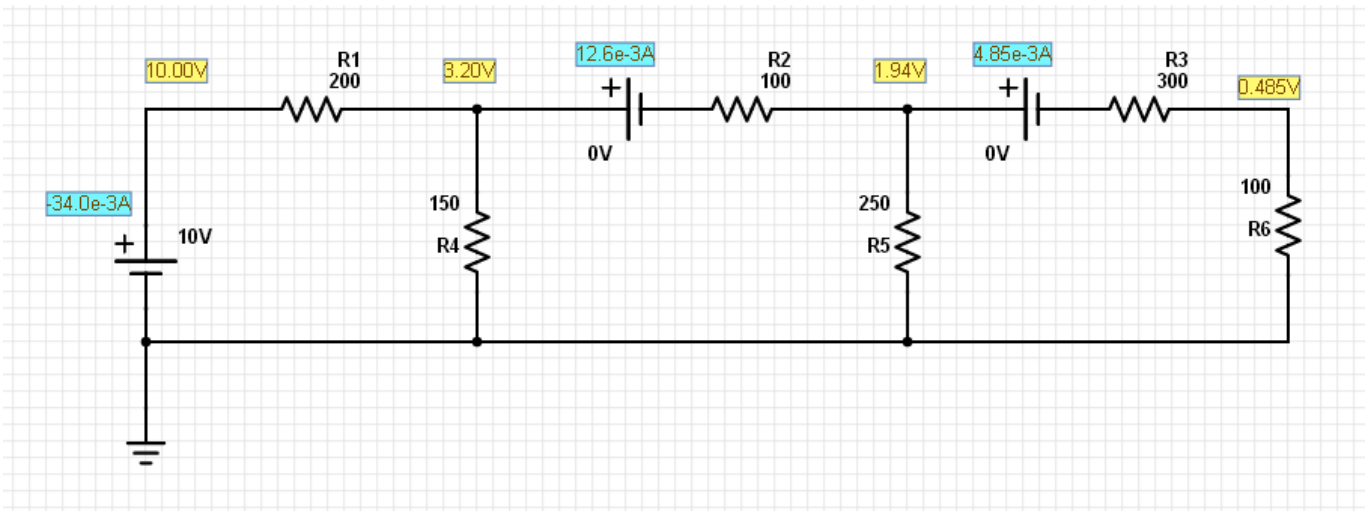

Problem 2-7

Voltage Nodes:

5) Write the voltage node equations for the following circuit

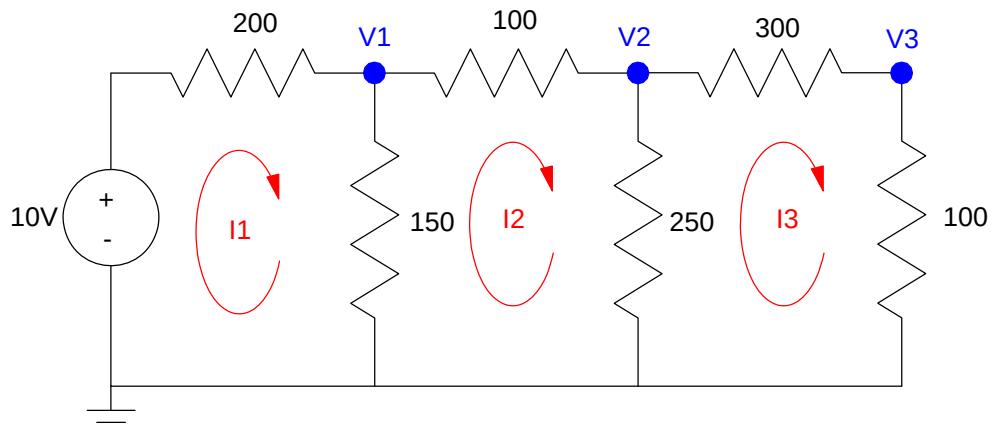

Node V1:

$$\left(\frac{V_1-10}{200}\right)+\left(\frac{V_1}{150}\right)+\left(\frac{V_1-V_2}{100}\right)=0$$

Node V2:

$$\left(\frac{V_2-V_1}{100}\right)+\left(\frac{V_2}{250}\right)+\left(\frac{V_2-V_3}{300}\right)=0$$

Node V3:

$$\left(\frac{V_3-V_2}{300}\right)+\left(\frac{V_3}{100}\right)=0$$

6) Solve using Matlab (or similar program)

Group terms

$$\left(\frac{1}{200}+\frac{1}{150}+\frac{1}{100}\right)V_1+\left(\frac{-1}{100}\right)V_2=\left(\frac{10}{200}\right)$$

$$\left(\frac{-1}{100}\right)V_1+\left(\frac{1}{100}+\frac{1}{250}+\frac{1}{300}\right)V_2+\left(\frac{-1}{300}\right)V_3=0$$

$$\left(\frac{-1}{300}\right)V_2+\left(\frac{1}{100}+\frac{1}{300}\right)V_3=0$$

Put in matrix form

$$\begin{bmatrix} \left(\frac{1}{200}+\frac{1}{150}+\frac{1}{100}\right) & \left(\frac{-1}{100}\right) & 0 \\ \left(\frac{-1}{100}\right) & \left(\frac{1}{100}+\frac{1}{250}+\frac{1}{300}\right) & \left(\frac{-1}{300}\right) \\ 0 & \left(\frac{-1}{300}\right) & \left(\frac{1}{100}+\frac{1}{300}\right) \end{bmatrix}\begin{bmatrix} V_1 \\ V_2 \\ V_3 \end{bmatrix}=\begin{bmatrix} \left(\frac{10}{200}\right) \\ 0 \\ 0 \end{bmatrix}$$

Solve in Matlab

```
-->A = [1/200+1/150+1/100,-1/100,0];

-->A = [A; -1/100,1/100+1/250+1/300,-1/300];

-->A = [A; 0, -1/300,1/100+1/300]
 A  =

    0.0216667  - 0.01         0.
  - 0.01         0.0173333  - 0.0033333
    0.         - 0.0033333    0.0133333

-->B = [10/200;0;0]
 B  =

    0.05
    0.
    0.

-->V = inv(A)*B
 V  =

    3.2038835
    1.9417476
    0.4854369
```

7) Check your answers in PartSim (or similar circuit simulator)