ECE 320 - Homework #3

pn junction, Diode VI characteristics, Ideal Diodes. Due Monday January 30th, 2017

Problem 1-2) Use the following circuit:

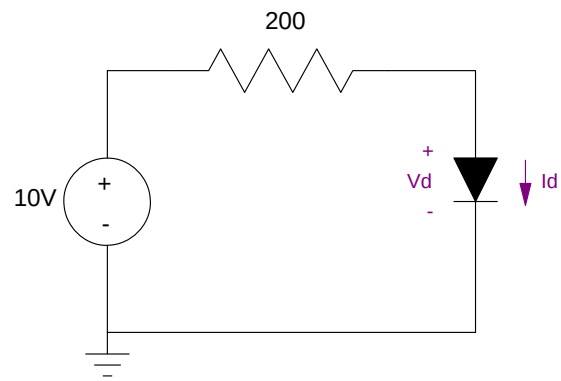

1) Determine the voltage and current through the diode for the following circuit assuming

$$V_d = 0.052 \ln(10^7 I_d + 1)$$

Set up 2 equations for 2 unknowns:

$$I_d = 10^{-7}\left(\exp\left(\frac{V_d}{0.052}\right) - 1\right)$$

$$10 = 200 I_d + V_d$$

Set up a cost function in matlab:

```
function [ J ] = cost( z )

 Vd = z(1);
 Id = z(2);

 e1 = Id - 1e-7 * ( exp(Vd / 0.052) - 1);
 e2 = 10 - 200*Id - Vd;

 J = e1^2 + e2^2;

end
```

Solve in Matlab

```
>> X = fminsearch('cost',[0.7,0.05])

X =

    0.6787    0.0466
```

Vd = 0.6787V

Id = 46.6mA

2) Determine the voltages and current through the diode assuming an ideal diode model with

Vf = 0.7V

This results in

Vd = 0.7V (vs. 0.6787V)

$$I_d = \left(\frac{10-0.7}{200}\right) = 46.5mA$$ (vs. 46.6mA)

Problem 3-6) Use the following circuit:

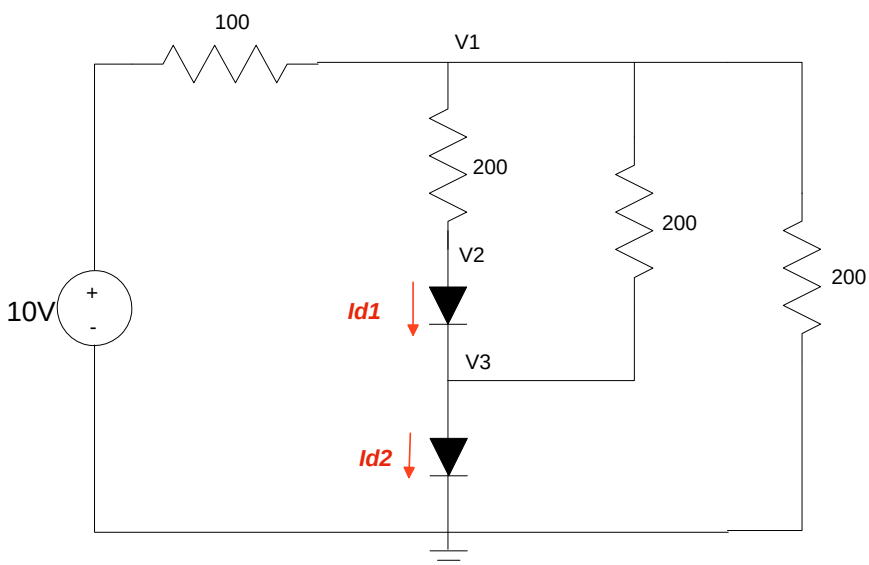

3a) Write the voltage node equations for this circuit assuming

$$V_d = 0.052 \ln(10^7 I_d + 1)$$

$$I_d = 10^{-7}\left(\exp\left(\frac{V_d}{0.052}\right) - 1\right)$$

Solution:

$$I_{d1} = 10^{-7}\left(\exp\left(\frac{V_2 - V_3}{0.052}\right) - 1\right)$$

$$I_{d2} = 10^{-7}\left(\exp\left(\frac{V_3 - 0}{0.052}\right) - 1\right)$$

$$\left(\frac{V_1 - 10}{100}\right) + \left(\frac{V_1 - V_2}{200}\right) + \left(\frac{V_1 - V_3}{200}\right) + \left(\frac{V_1}{200}\right) = 0$$

$$\left(\frac{V_2 - V_1}{200}\right) + I_{d1} = 0$$

$$-I_{d1} + I_{d2} + \left(\frac{V_3 - V_1}{200}\right) = 0$$

3b) Solve these nonlinear equations for V1, V2, and V3 (hint: use fminsearch in Matlab)

Set up a cost function in matlab:

```
function [ J ] = cost( z )

 V1 = z(1);
 V2 = z(2);
 V3 = z(3);

 Id1 = 1e-7 * ( exp((V2-V3)/0.052) - 1);
 Id2 = 1e-7 * ( exp((V3-0)/0.052) - 1);

 e1 = (V1-10)/100 + (V1-V2)/200 + (V1-V3)/200 + V1/200;
 e2 = (V2-V1)/100 + Id1;
 e3 = -Id1 + Id2 + (V3-V1)/200;

 J = e1^2 + e2^2 + e3^2;

end
```

Solve:

```
>> X = fminsearch('cost',[2.1,1.4,0.7])

      V1          V2          V3
    4.4040      1.3385      0.6816
```

4) Determine the voltages and current through the diode assuming an ideal diode model with

Vf = 0.7V

Vin = +10V

Assume both diodes are on

- V3 = 0.7V (vs. 0.6816 V)
- V2 = 1.4V (vs. 1.3385 V)

Solve for V1 using voltage nodes:

$$\left(\frac{V_1-10}{100}\right)+\left(\frac{V_1-V_2}{200}\right)+\left(\frac{V_1-V_3}{200}\right)+\left(\frac{V_1}{200}\right)=0$$

$$\left(\frac{V_1-10}{100}\right)+\left(\frac{V_1-1.4}{200}\right)+\left(\frac{V_1-0.7}{200}\right)+\left(\frac{V_1}{200}\right)=0$$

$$\left(\frac{1}{100}+\frac{1}{200}+\frac{1}{200}+\frac{1}{200}\right)V_1=\frac{10}{100}+\frac{1.4}{200}+\frac{0.7}{200}$$

$$V_1=4.420V$$ (vs. 4.4040 V)

5) Solve for the voltages and currents using PartSim. Using Fairchild 1N4004 Diodes:

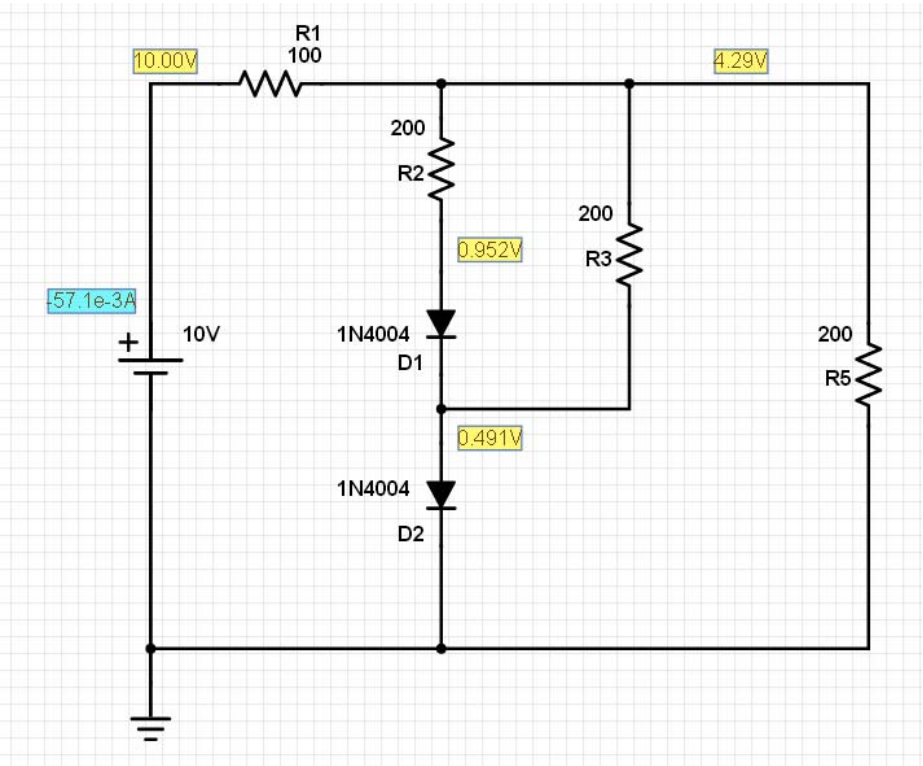

Using Fairchild 1N4005 Diodes: These diodes look mode similar what we have in lab:

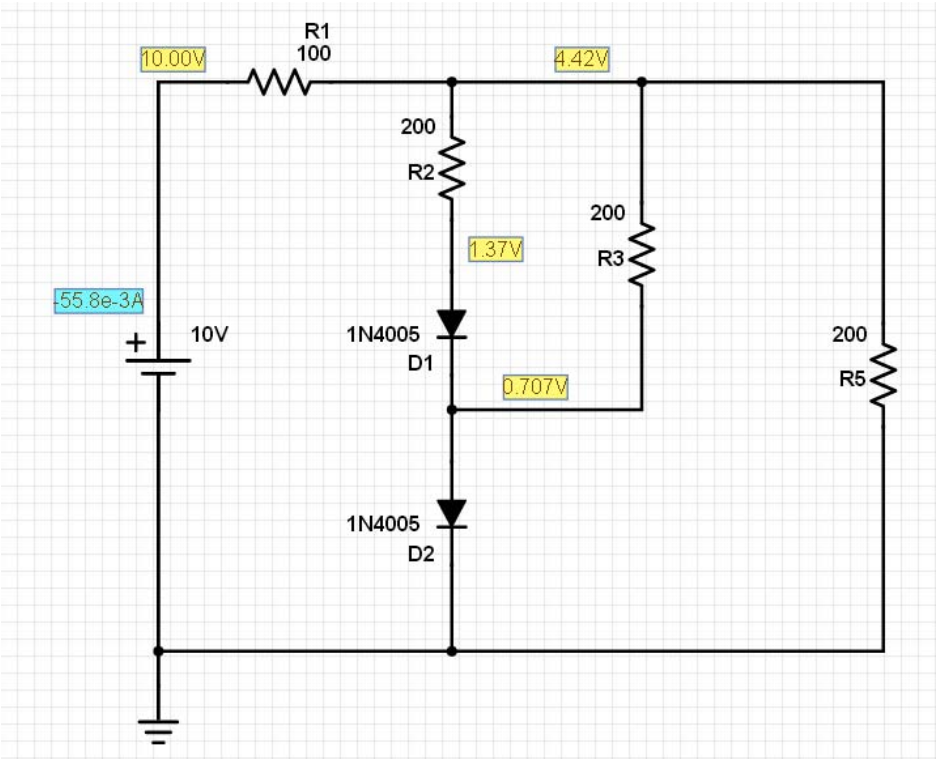

6) In lab, build this circuit using silicon diodes. Measure the voltages and compute the currents